CAMS with Rapid Stop
PURGE CYCLE TIMING DIAGRAM

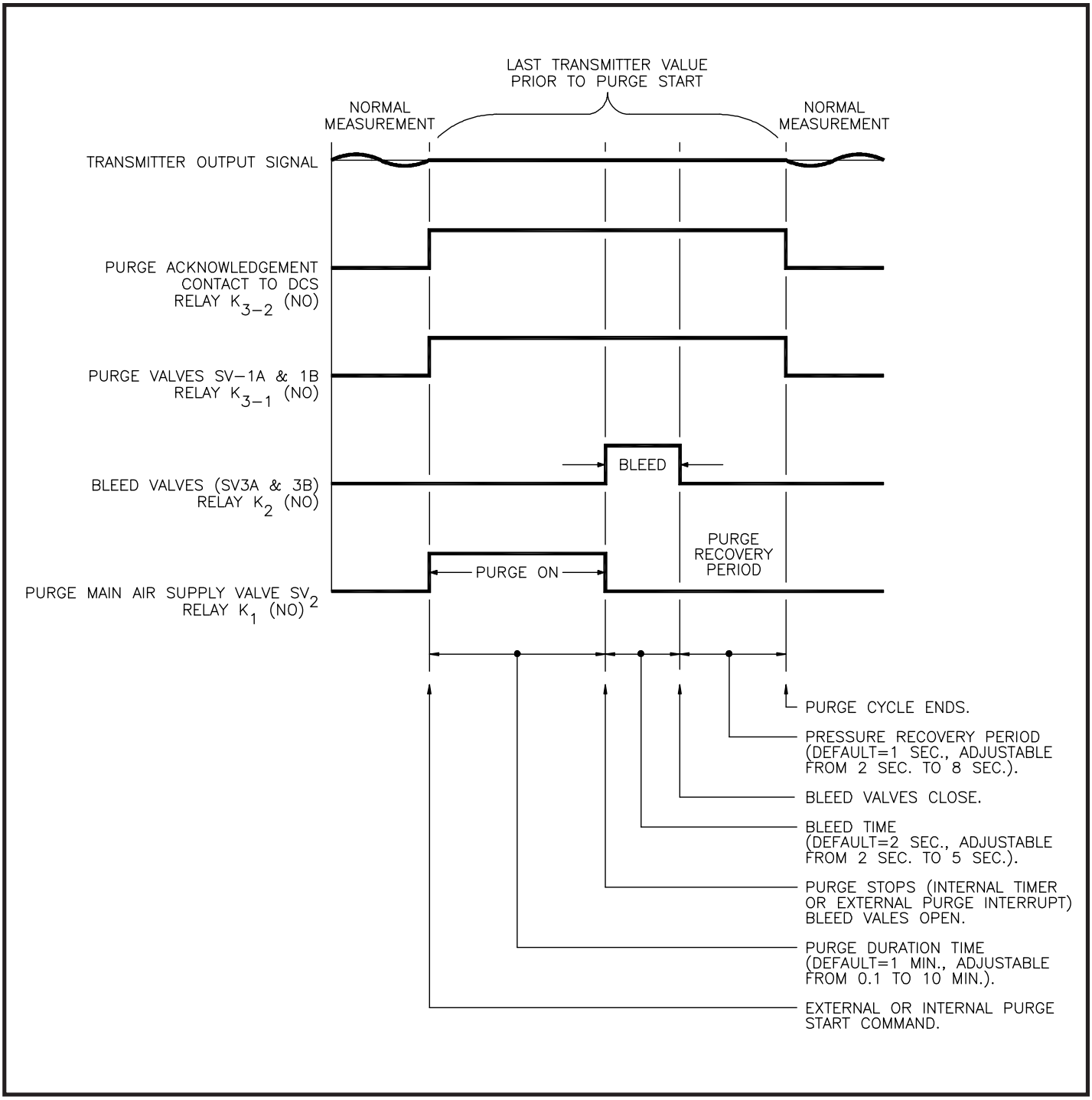

P.O. Box 6358 • Santa Rosa, CA 95406 • (707) 544-2706 • (707) 526-2825 Fax
www.airmonitor.com • amcsales@airmonitor.com

AIR MONITOR CORPORATION