Installation, Operation, and Maintenance Manual

VELTRON DPT-*plus*

Microprocessor Based Ultra-Low Range Pressure & Flow "Smart" Transmitter

Version 1.4X

Installation, Operation & Maintenance

Air Monitor Corporation provides complete technical support between the hours of 7 a.m. and 5 p.m. PST, M-F

Contact our Service Department
Toll Free: 1-800-AIRFLOW

or fax us at 1-707-526-2825

Air Monitor
Precision Airflow Measurement
An ONICON Brand

TABLE OF CONTENTS

TABLE OF CONTENTS

SECTION 5 – OPERATION (con't)

SECTION 6 – CALIBRATION

INSTRUMENT WARRANTY

Air Monitor Corporation (hereinafter referred to as “Seller”) warrants that at the time of shipment, products sold pursuant to this contract will be free from defects in materials and workmanship, and will conform to the specifications furnished or approved in writing by Seller. No warranty is given that delivered products will conform to catalog sheets, data sheets, and the like, which are subject to change without notice.

Seller will repair or replace, at its option, any products listed under this warranty which is returned freight prepaid to Seller within the earlier of three (3) years after start-up or thirty-nine (39) months after shipment that, upon test and examination, proves defective within the terms of this warranty. The warranty period for any item repaired or replaced shall be for the time remaining on the warranty period of the original components. Purchaser shall notify Seller in writing of such defect within sixty (60) days of discovery of the defect.

This warranty does not extend to any product sold by Seller which has been the subject of misuse, neglect, accident, damage or malfunction caused by interconnection with equipment manufactured by others, improper installation or storage, or used in violation of instructions furnished by Seller, nor does it extend to any product which has been repaired or altered by persons not expressly approved by Seller. Nor does Seller warrant equipment against normal deterioration due to environment; nor items such as lamps, glass, and similar items subject to wear or burnout through usage. Adjustments for items or equipment not manufactured by Seller shall be made to the extent of any warranty of the manufacturer or supplier thereof.

Seller shall not be liable for any special or consequential damages or for loss of damage, directly or indirectly arising from the use of the products. Seller's warranty shall be limited to replacement of defective equipment and shall not include field removal and installation expenses.

The warranty set forth above is in lieu of all other warranties either express or implied and constitutes the full extent of Air Monitor Corporation’s liability to the customer, or any other party for breach of warranty.

THERE ARE NO EXPRESS WARRANTIES EXCEPT AS SET FORTH HEREIN AND THERE ARE NO IMPLIED WARRANTIES OF MERCHANTABILITY OF FITNESS FOR ANY PARTICULAR PURPOSE, WHICH ARE PARTICULARLY DISCLAIMED.

1 – GENERAL INFORMATION

1.1 – DESCRIPTION

The VELTRON DPT-*plus* ultra-low range pressure and flow "smart" transmitter is designed to convert the low magnitude pressure signal generated by airflow station or probe, and a temperature input into 4-20mA signals proportional and linear to flow (or pressure) and temperature. The VELTRON DPT-*plus* is equipped with AUTO-zero for the elimination of zero error due to thermal, electric, or mechanical effects. The VELTRON DPT-*plus* is packaged in a NEMA 4X enclosure with industry-standard process connections. The integral LCD display provides a continuous readout of the measured process and two additional lines of operating data.

1.2 – THEORY OF OPERATION

High and low pressure signals generated by airflow stations and probes, or static pressure sensors act upon opposite sides of a flexible diaphragm within the transducer. The differential between the two pressure signals displaces the diaphragm; the magnitude of the displacement being measured creates an electrical DC output from the transducer. After undergoing A/D conversion, the resulting digital signal representing differential pressure or velocity pressure can be "manipulated" within the microprocessor: square rooted for velocity or flow application; scaled for units of measure and area for process output; and scaled for local data display. The built-in microprocessor runs the program that provides the following basic functions: Timing, logic, and mathematical operations, analog input signal multiplexing, analog input/output calibration, output relay operation, automatic zeroing valve operation, User Setup menu system, and display (LCD) indication.

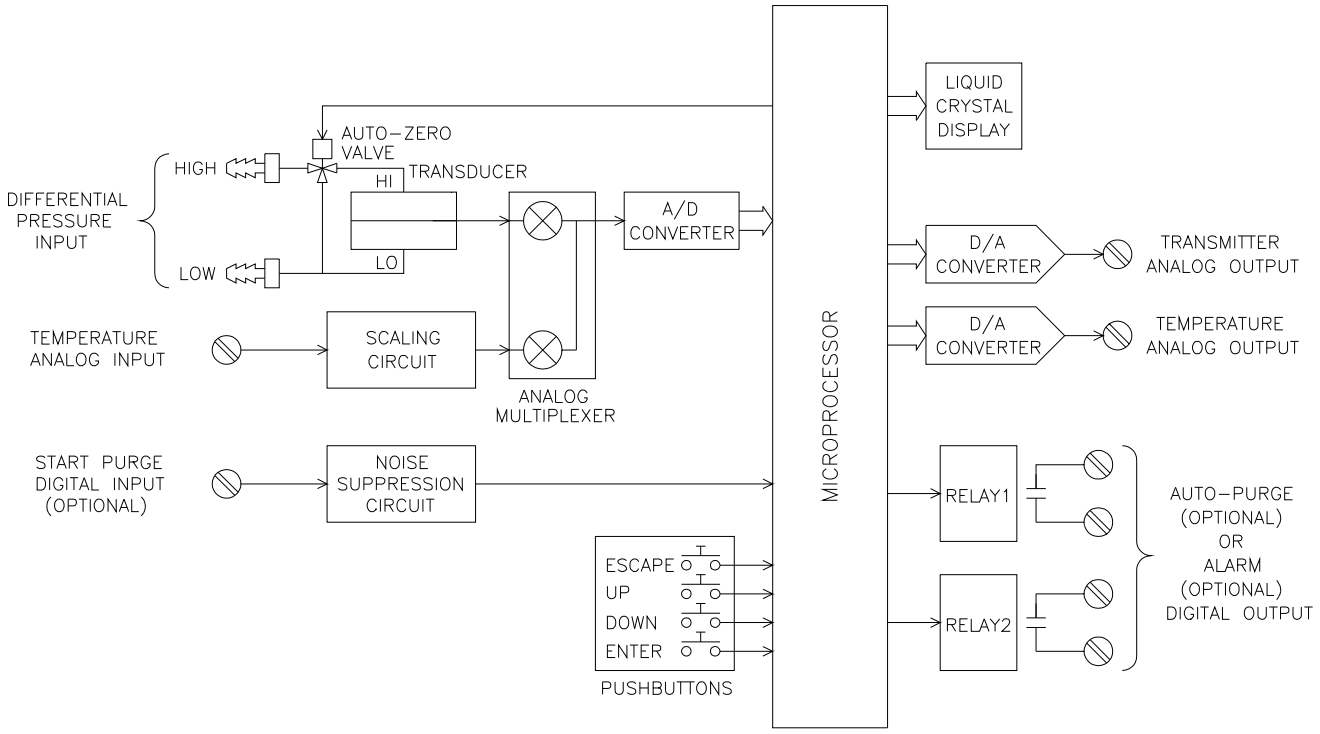

2 – PERFORMANCE SPECIFICATIONS

2.1 – TRANSMITTER

Accuracy. 0.1% of Natural Span, including hysteresis, deadband, non-linearity, and non-repeatability.

Type. Differential pressure, flow, and mass flow.

Ranges.

Natural Spans	Bi-Polar Natural Spans
0 to 25.00 IN w.c.	
0 to 10.00 IN w.c.	ï 10.00 to 10.00 IN w.c.
0 to 5.00 IN w.c.	– 5.00 to 5.00 IN w.c.
0 to 2.00 IN w.c.	– 2.00 to 2.00 IN w.c.
0 to 1.00 IN w.c.	– 1.00 to 3.00 IN w.c.
0 to 0.50 IN w.c.	– 0.50 to 0.50 IN w.c.
0 to 0.25 IN w.c.	– 0.25 to 0.25 IN w.c.
0 to 0.10 IN w.c.	– 0.10 to 0.10 IN w.c.
0 to 0.05 IN w.c.	– 0.05 to 0.05 IN w.c.

Span Rangeability. The calibrated span can be down ranged to 40% of the Natural Span.

Stability. ±0.5% of Natural Span for six months.

Temperature Effect.
Zero. None; corrected by AUTO-zero.
Span. 0.015% of Natural Span/ºF.

Mounting Position Effect. None; corrected through transmitter automatic zeroing.

Span and Zero Adjustment. Digital, via internally located pushbuttons.

Low Pass Filtration. Response time to reach 98% of a step change is adjustable from 2.0 to 250.0 seconds.

Max Zero Elevation and Suppression. 100% of Natural Span.

Overpressure and Static Pressure Limit. 25 psig.

Automatic Zeroing.
Accuracy. Within 0.1% of calibrated span.
Frequency. Every 1 to 24 hours on 1 hour intervals.

Temperature Limits.
–20 to 180ºF Storage; +32 to 140ºF Operating.

Humidity Limits. 0-95% RH, non-condensing.

2.2 – INDICATION

Display. A backlit, graphical LCD providing three lines of data display. Also used for programming.

2.3 – INPUTS/OUTPUTS

Analog Inputs. Differential pressure (high and low), and 4-20mA, 2-wire, internally or externally loop powered temperature signal.

Analog Outputs. Dual 4-20mA outputs, configurable as internally powered/non-isolated, or externally powered/isolated.

Digital Input. Dry contact input for notification of AUTO-purge start (from AUTO-purge panel).

Digital Outputs. Dual Form A dry contacts rated for 3 amps at 24VAC/VDC for optional HI/LO alarm; or Form A dry contacts for AUTO-purge acknowledgment.

Temperature Compensation Selection. Pushbutton selection of linearized or non-linear temperature transmitter input for the following temperature sensing types:

Type E	–50 to 1750ºF	–50 to 950ºC
Type T	–50 to 750ºF	–50 to 400ºC
Type J	–50 to 2000ºF	–50 to 1090ºC
Type K	–50 to 2000ºF	–50 to 1090ºC
RTD	–50 to 1500ºF	–50 to 815ºC

2.4 – POWER

Power Supply.
Standard 24VAC (20-28VAC) or 24VDC (20-32VDC).
Optional 120VAC (100-132VAC), via external transformer.

Power Consumption.
Standard: 8VA at 24VAC; 6VA at 24VDC; 36VA at 120VAC.

Circuit Protection. Power input is fused and reverse polarity protected.

3 – FEATURES

3.1 – USER SETUP MENU

The microprocessor program contains a User Setup menu system for setting user selectable parameters. Four pushbuttons: (X), (↑), (↓), and (↵) allow the user access to the menu for setting configuration modes and values. Refer to the Configuration Programming (Section 5.6) instructions for operation details. Also contained in the User Setup menu is all input and output calibration. The calibration method is completely digital and contains no analog potentiometer adjustments which are susceptible to drift. Non-volatile memory is used for storing all setup parameters and calibration values, and will remain unchanged after set, even when power to the unit is off.

3.2 – AIR DENSITY CORRECTION

The VELTRON DPT-*plus* transmitter is capable of accepting a process temperature input to perform density correction to volumetric or mass flow. Temperature input is a 4-20mA signal from a remote temperature transmitter; non-linear temperature inputs can be linearized by the microprocessor.

3.3 – TRANSMITTER HOLD

Certain operations performed by the microprocessor place the unit into a *Hold* mode. This occurs when the User Setup menu system is activated, when an AUTO-zero is performed, or when an AUTO-purge cycle is in progress. When in *Hold*, all *Normal* mode processing is halted and outputs are held at their last value prior to *Hold*. *Normal* operation is indicated by the "CPU Activated" ● (dot) in the upper right of the display blinking at a rate of four times per second. A *Hold* mode is indicated by the "CPU Activated" ● (dot) blinking at a rate of once per second.

3.4 – AUTOMATIC ZEROING

At periodic intervals the microprocessor will automatically execute an AUTO-zero cycle consisting of the following sequence: The transmitter output and display signals are put on *Hold*; a valve is activated which disconnects the process high pressure from the high port of the transducer and connects the process static pressure to both sides of the transducer, creating a true zero differential pressure; after a brief stabilization period, the transducer zero offset signal is measured and stored in memory; the valve is deactivated and after a brief period for process signal stabilization, the *Hold* is released and *Normal* process measurement resumes. zero will be displayed whenever AUTO-zero cycle is in progress.

During *Normal* operation, the zero offset value stored in memory is subtracted from subsequent transducer readings until the next AUTO-zero cycle occurs and repeats the process. For calibration purposes a switch is provided which allows the user to manually activate the zeroing valve. AUTO-zero On/Off and Interval are available and configurable using the User Setup menu.

3.5 – ALARM (option)

The VELTRON DPT-*plus* Alarm provides the means for having the process signal compared to user selectable alarm points and automatically activates a Form A relay to generate dry contact alarm signal(s). User selectable alarm configurations of Low/High, Low1/Low2, and High1/High2 plus Alarms On/Off, Setpoints, Dead Bands, and Delays are configurable via the User Setup menu. Alarm Setpoints can be displayed during *Normal* operating mode.

One choice among three alarm types are available to the user: Low/High; Low1/Low2; or High1/High2. An Alarm Delay is available, if implemented (any time setting greater than zero), any condition that would normally cause an alarm, triggers the delay timer first. If the alarm condition still exists after the delay times out, then the appropriate alarm relay(s) are activated. alrm will be displayed whenever any alarm relay is activated. Alarm On/Off, Type, Setpoints, Deadbands, and Delays are available and configurable using the User Setup menu. The Alarm Setpoints can be displayed during *Normal* operation.

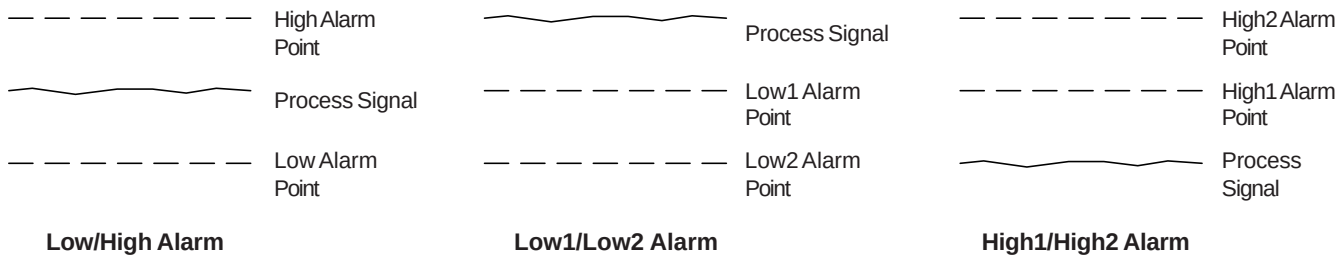

3.6 – DATA DISPLAY

The integral display is a multi-line, backlit graphical LCD capable of displaying three lines of operating data. It can also display a user settable I.D. number using any combination of standard ASCII characters. It is also used by the User Setup menu for displaying the menu parameters and values. Configuring the display for *Normal* operation is done using the User Setup menu.

3.7 – K-FACTOR

The VELTRON DPT-*plus* is equipped with a K-factor feature which allows for the calculation and introduction of a bias and/or gain factor into the transmitter's flow calculations. The K-factor feature is intended to be used in two types of applications:

1. To adjust for flow measurement error as a result of highly distorted airflow induced by upstream or downstream flow disturbances.

2. To adjust the transmitter's output to bring it into close correlation with field measured flow data.

The K-Factor gain and bias values can be entered directly or the VELTRON DPT-*plus* can calculate these values based on measured and reference values from a 1, 2 or 3 point airflow traverse.

3.8 – FLOW/DIFFERENTIAL PRESSURE CALCULATOR

The VELTRON DPT-*plus* is equipped with an integral calculator feature that allows the user to determine the maximum flow or differential pressure from the appropriate variables. This feature allows the user to determine input or output values at various points of the process or new values if the process parameters have changed. Also, the calculator can be used to implement a single-point density compensation for operating temperature and/or absolute pressure.

3.9 – HIGH TURNDOWN RATIO OPERATION

The VELTRON DPT-*plus* transmitter, with its high level of accuracy and automatic zeroing circuitry, can maintain linear output signals on applications requiring velocity turndown of 10 to 1 (equal to a velocity pressure turndown of 100 to 1).

3.10 – HAZARDOUS LOCATIONS

Hazardous Locations. The VELTRON DPT-*plus* transmitter is Factory Mutual approved for the following:

- Explosion Proof: Class 1, Division 1, Groups B, C, D.
- Dust Ignition Proof: Class II, III, Division 1, Groups E, F, G.
- Suitable for indoor and outdoor NEMA Type 4X hazardous locations.

3.11 – ENCLOSURE

The VELTRON DPT-*plus* transmitter is packaged in a NEMA Type 4X enclosure with standard industrial process connections.

3.12 – MULTIPLE OPERATING POWER SELECTIONS

The VELTRON DPT-*plus* can be powered by 24VAC or 24VDC.

4 – INSTALLATION

4.1 – RECEIVING AND INSPECTION

- Carefully remove the VELTRON DPT-*plus* from the shipping container and inspect for any damage. If any damage has occurred in transit, contact freight carrier.
- Save the shipping container for possible future use in returning the VELTRON DPT-*plus* to the factory for recalibration.
- Included in the shipping container are two spare fuses and Mounting Bracket Kit consisting of: Two-piece bracket, U-bolt, and necessary hardware. If any items are missing, contact the Customer Service Department at 1-800-AIR-FLOW.
- Review the Factory Set-Up Information Sheet provided separately and verify the W.O. # and Serial # match those on the VELTRON DPT-*plus*. Verify that the configuration recorded on the Factory Set-Up Information Sheet is correct for your application. If not, contact Air Monitor's Customer Service Department at 1-800-AIRFLOW for further guidance.

Note: The VELTRON DPT-*plus* has been configured and calibrated to customer specified parameters (see "Factory Setup Information Sheet" at the end of this Manual), and requires no additional calibration/verification prior to installation.

4.2 – LOCATION

- The VELTRON DPT-*plus* is housed in a NEMA Type 4X enclosure which is suitable for outdoor locations.
- The VELTRON DPT-*plus* is Factory Mutual approved as explosion proof for Class I, Division 1, Group B, C, and D; dust-ignition proof for Class II/III, Division 1, Groups E, F, and G hazardous (classified) location, indoor and outdoor (NEMA Type 4X).
- The ambient temperature of the selected mounting location must be between 32º – 140ºF. Consideration should be given to units installed in enclosures exposed to direct sunlight.
- The VELTRON DPT-*plus* may be mounted in any position or attitude and is not affected by any reasonable shock or vibration.

4.3 – MOUNTING

Although not required, the most convenient method for mounting the VELTRON DPT-*plus* is utilizing the included Mounting Bracket Kit. Figure 4.1 shows how the various components are assembled, and Figure 4.2 depicts a variety of mounting orientations.

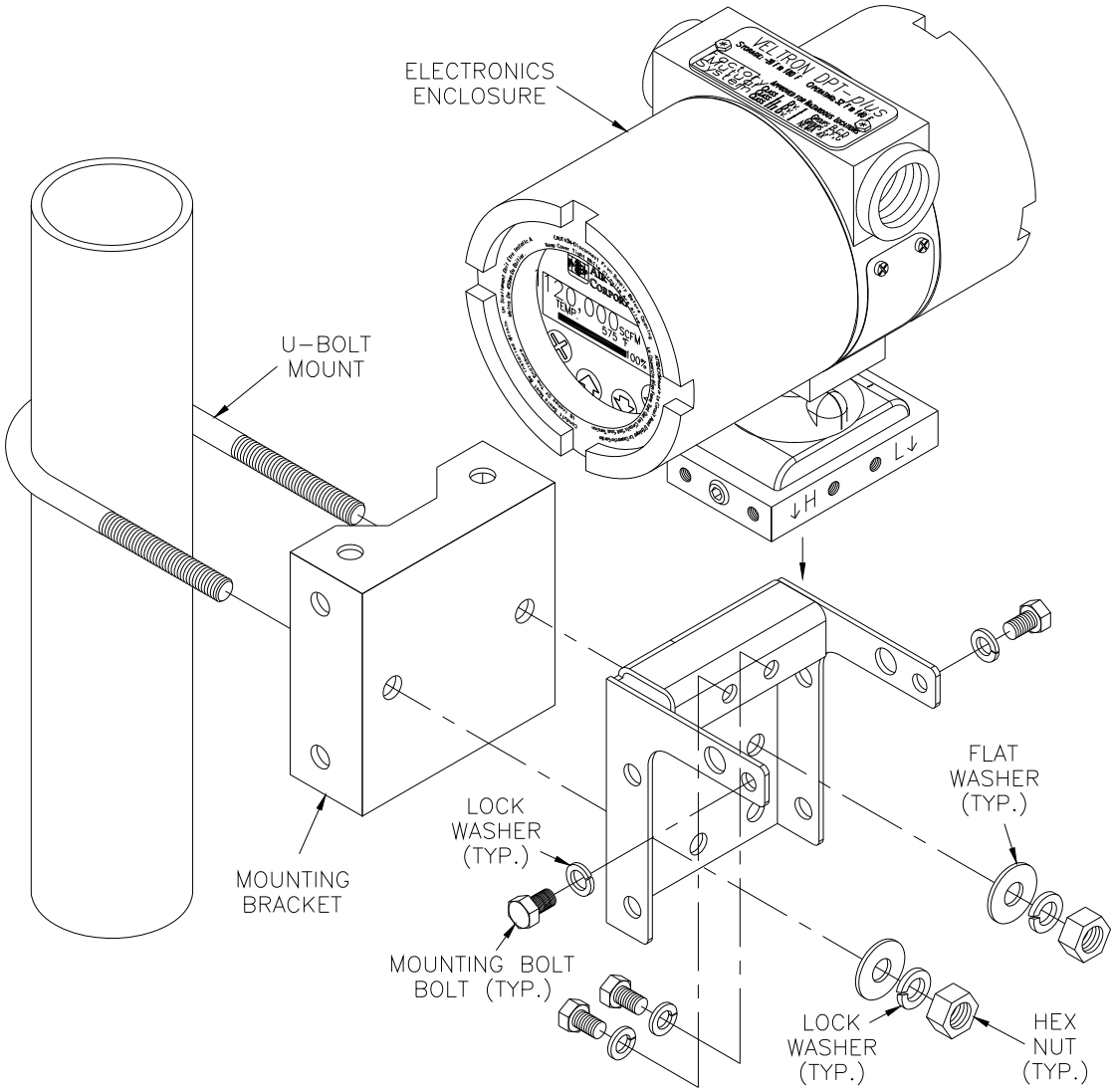

Figure 4.1

CAUTION
Do not rotate the electronics enclosure relative to the base. Internal signal tubing could become twisted or kinked, causing possible transducer overpressurization, voiding warranty.

4.3 – MOUNTING (con't)

If using the Mounting Bracket Kit, Figure 4.2 depicts a variety of mounting orientations.

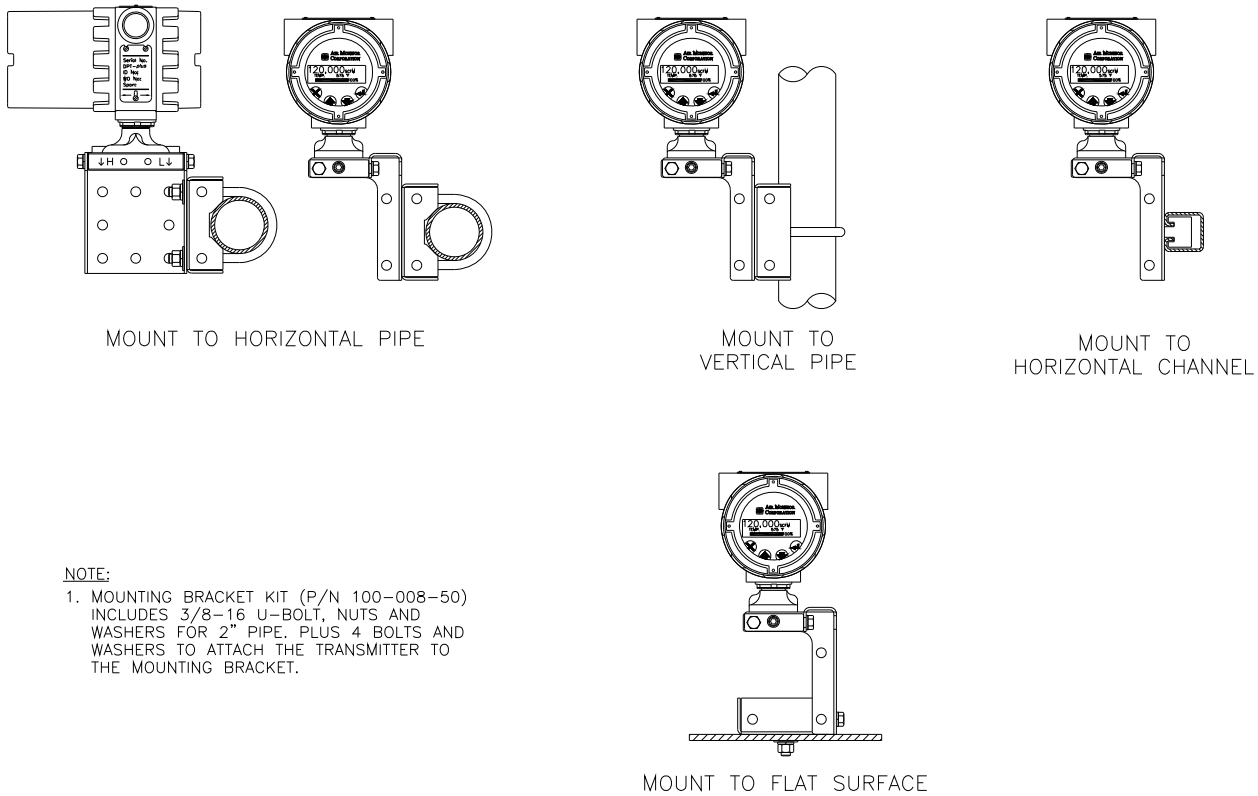

Figure 4.2

CAUTION
VELTRON DPT-*plus* should not be mounted solely by the process connections or electrical conduit, which do not provide sufficient support.

4.4 – PROCESS CONNECTIONS

The VELTRON DPT-*plus* has two 1/4"-18 FPT process connections at 2-1/8" center-to-center on the bottom of the stainless steel base.

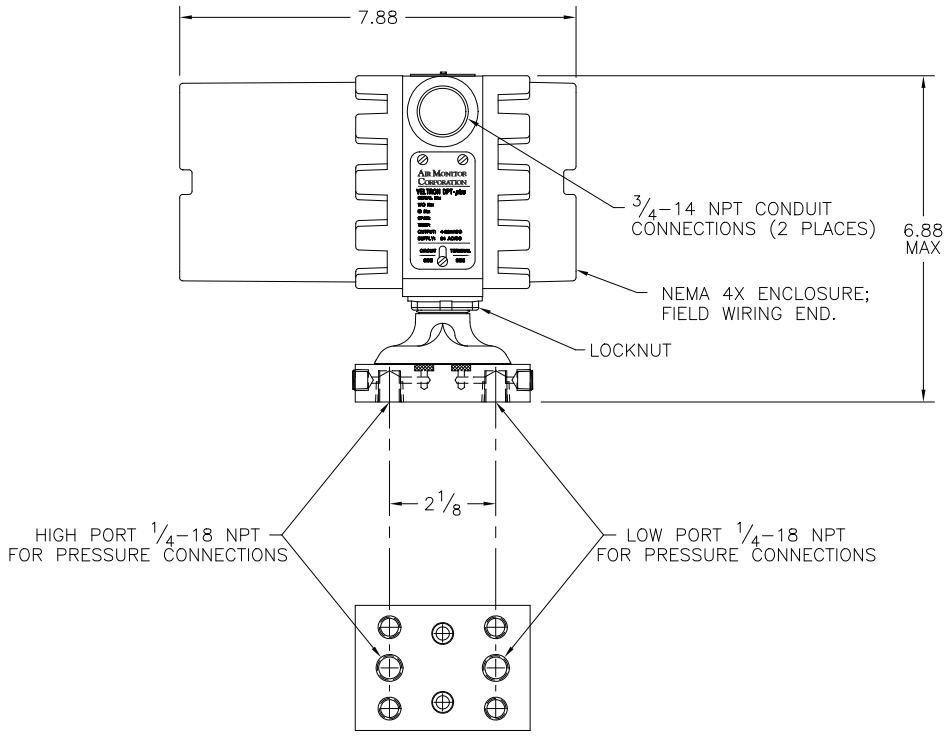

Figure 4.3

To the selected process connections, customer should install appropriate fitting required to connect process signal tubing/piping from process sensor.

When connecting the VELTRON DPT-*plus* to an airflow measuring device, connections must be completed as follows:
– High Port on VELTRON DPT-*plus* connects to Total Pressure from airflow measuring device.
– Low Port on VELTRON DPT-*plus* connects to Static Pressure from airflow measuring devices.

When connecting VELTRON DPT-*plus* for positive room pressurization, connections must be completed as follows:
– High Port on VELTRON DPT-*plus* connects to sensor from monitored room.
– Low Port on VELTRON DPT-*plus* connects to reference sensor.

When connecting VELTRON DPT-*plus* for negative room pressurization, connections must be completed as follows:
– High Port on VELTRON DPT-*plus* connects to reference sensor.
– Low Port on VELTRON DPT-*plus* connects to sensor from monitored room.

Although any size of tube/pipe can be used, the response time of the VELTRON DPT-*plus* to process change increases if with increasing tube/pipe size or increasing in tube/pipe length.

CAUTION
It is extremely important that no pressure be present in signal tubing at the time of installation, and the orientation of high and low pressure signal lines is maintained between the source and the VELTRON DPT-*plus*.

4.5 – POWER/SIGNAL CONNECTIONS

All electrical connections are done at the terminal strips located under the Terminal Side enclosure cover. All wiring should be routed through one or both 3/4"-14 NPT conduit connections. See Figure 4.4.

Figure 4.4 represents the terminal strip and the connections for input power and the various inputs/outputs available.

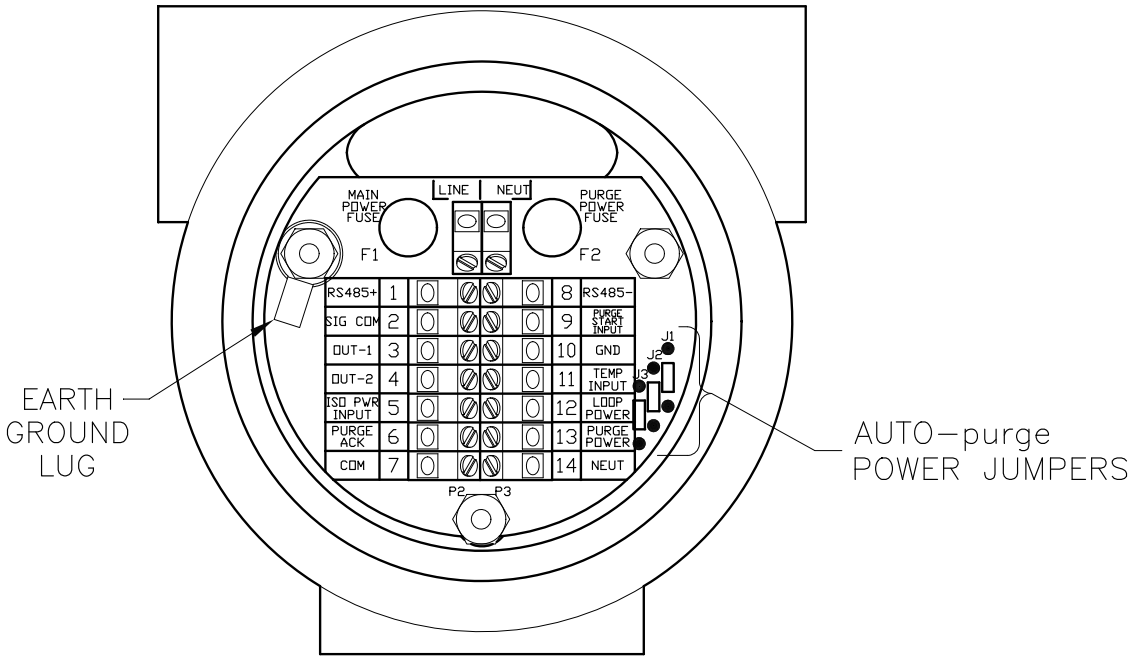

Figure 4.4

WIRING. It is recommended that all wiring be 14 to 22 AWG. 14 AWG is the maximum gauge that the terminal strip can accommodate. No more than two wires should be connected to any one terminal. 18 AWG is the maximum gauge wire that can be doubled up in one terminal.

Note: It is recommended that an ON/OFF switch be placed in line of the incoming power to allow turning power on and off. Power should be OFF when connecting power wiring to the VELTRON DPT-*plus*.

POWER SUPPLY (Terminals LINE and NEUT). Power required by the VELTRON DPT-*plus* must be connected to the two terminals labeled LINE and NEUT. Earth ground should be connected to the terminal lug provided on the upper left mounting stud (see Figure 4.4). Power supply must be 20-28VAC or 20-32VDC. When powering multiple units from one power source, polarity must be maintained.

4.5 – POWER/SIGNAL CONNECTIONS (con't)

OUTPUT 1. This output represents the measured process and is provided as either internally powered/non-isolated or externally powered/isolated. Review the Factory Information Set-Up Sheet (at the end of this manual) to determine how your unit is configured. Which of the following connection methods to use is determined by how the unit is configured.

INTERNALLY POWER/NON-ISOLATED (Terminals 2(SIG COM) and 3(OUT-1)). This 4-20mA output is sourced (powered) by the VELTRON DPT-*plus*. Maximum load resistance is dependent on the power supply voltage, see load graph (Figure 4.5).

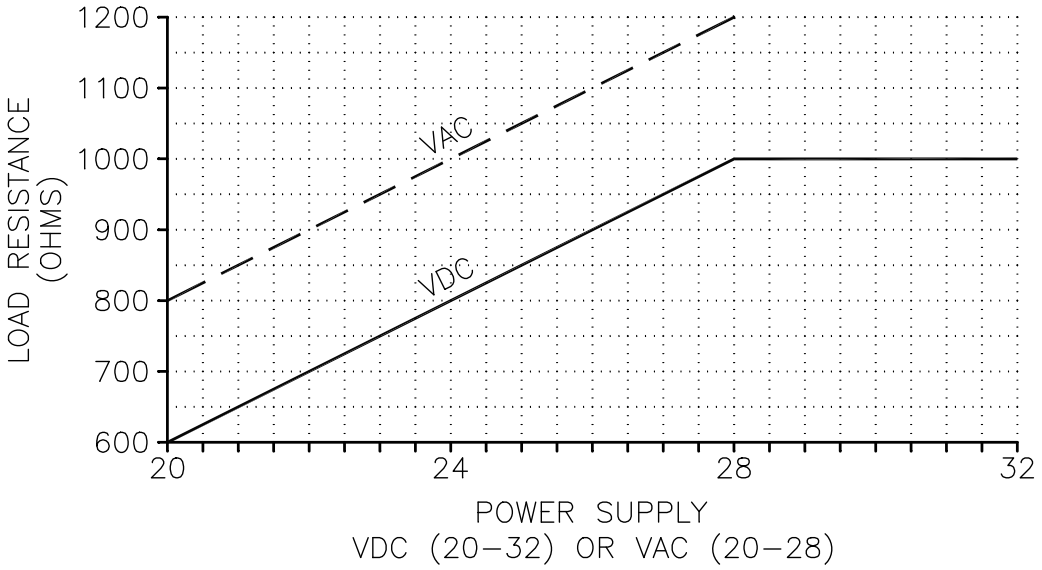

Figure 4.5

EXTERNALLY POWERED/ISOLATED (Terminals 3(OUT-1) and 5 (ISO PWR INPUT)). Power for this 4-20mA output is via an external (customer provided) 12-32VDC supply. Maximum load resistance is dependent on the power supply voltage, see load graph (Figure 4.6)

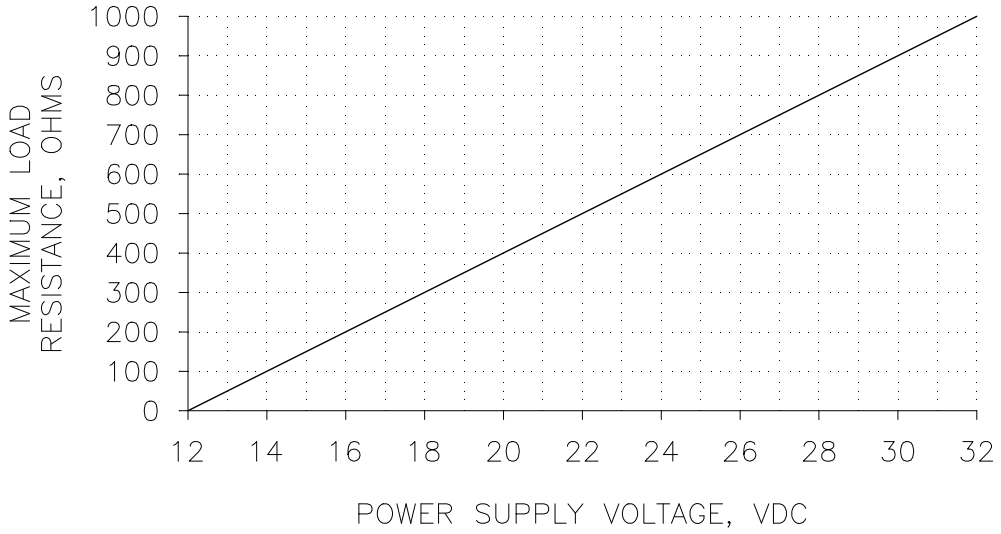

Figure 4.6

4.5 – POWER/SIGNAL CONNECTIONS (con't)

OUTPUT 2. This output can represent temperature, process, or process D.P., and is provided as either internally powered/non-isolated or externally powered/isolated. Review the Factory Information Set-Up Sheet (provided separately) to determine how your unit is configured. Which of the following connection methods to use is determined by how the unit is configured.

INTERNALLY POWER/NON-ISOLATED (Terminals 2(SIG COM) and 4(OUT-2)). This 4-20mA output is sourced (powered) by the VELTRON DPT-*plus*. Maximum load resistance is dependent on the power supply voltage, see load graph (Figure 4.5).

EXTERNALLY POWERED/ISOLATED (Terminals 4(OUT-2) and 5 (ISO PWR INPUT)). Power for this 4-20mA output is via an external (customer provided) 12-32VDC supply. Maximum load resistance is dependent on the power supply voltage, see load graph (Figure 4.6).

Note: If it is desired to change from internally powered to externally powered (or vice versa), it is required that jumpers J1 through J5 be changed in addition to the change in wiring at the terminal strip.

Jumpers J1 through J5 are located on the Analog Board (see Section 9 – Parts List for location).

Figure 4.7 below shows the details of Jumpers J1 through J5. For internally powered, all jumper connectors must be placed over the two jumper pins labeled DIR. For externally powered, all jumper connectors must be placed over the two jumper pins labeled ISO.

These jumpers affect both Output 1 and Output 2, such that both are set the same (i.e. both internally powered or both externally powered).

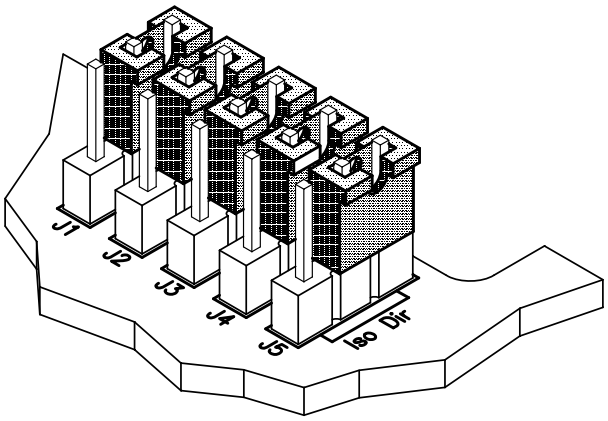

Figure 4.7

Figure 4.7 depicts jumpers set for internally powered.

4.5 – POWER/SIGNAL CONNECTIONS (con't)

ALARM 2/AUTO-purge ACKNOWLEDGMENT (Terminals 6(PURGE ACK) and 7(COM)). This set of unpowered relay contacts is used for Alarm 2 status or as AUTO-purge acknowledgment. Contacts are normally open and close at the existence of an alarm condition or the initiation of an AUTO-purge cycle. Review the Factory Information Set-Up Sheet (provided separately) to determine which (if any) your unit is configured for.

AUTO-purge "START" SIGNAL (Terminals 9(PURGE START INPUT) and 10(GND)). Customer to provide momentary (0.5 to 10 seconds unpowered) dry contact as notification of AUTO-purge cycle initiation. Upon receiving this signal, transmitter hold will be activated.

TEMPERATURE INPUT (Terminals 2(SIG COM), 11(TEMP INPUT), and 12(LOOP POWER). Follow the appropriate Figure below for connecting a temperature input signal.

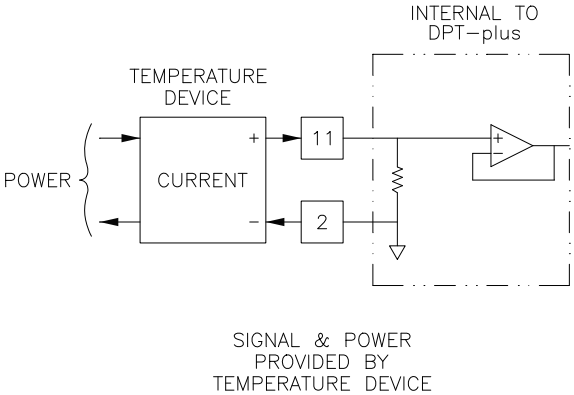

Figure 4.8

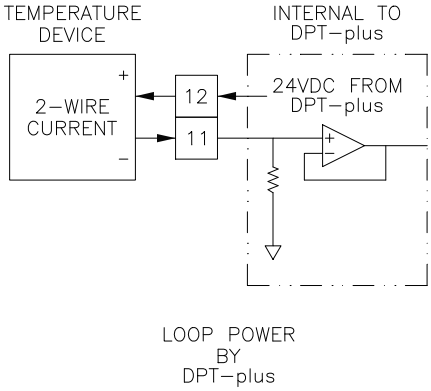

Figure 4.9

ALARM 1 (Terminals13(PURGE POWER) and 14(NEUT)). This set of relay contacts is used for Alarm 1 status. Contacts are normally open and only close at the existence of an alarm condition.

5 – OPERATION

5.1 – INTRODUCTION

The VELTRON DPT-*plus* has been configured and calibrated at the Factory to customer specified parameters which are recorded on the VELTRON DPT-*plus* Factory Information Set-Up Sheet, provided separately. Review this information and verify that the VELTRON DPT-*plus* set-up is correct for your application. If any problems or discrepancies are detected, contact Air Monitor's Customer Service Department at 1-800-AIRFLOW prior to proceeding.

5.2 – START-UP

1. After Installation has been verified in accordance with Section 4 apply power.

2. Display will briefly indicate:

```
DPT-plus      ●
Version 1.40*
```

Dot will blink at a rate of once per second

*Your actual version may be different.

Followed by:

```
DPT-plus      ●
Version 1.40
```

After 5 seconds, display will indicate:

```
DPT-plus zero ●
Version 1.40
Thanks for Choosing
AIR MONITOR
```

for approximately 10 seconds (to perform AUTO-zero), and then return to *Normal* display mode, and the dot in the upper right of the display indicating CPU Activated will blink rapidly (4 times per second). This is *Normal* operation mode and no further user interface is required. If, however, user would like to verify configuration or change user selectable parameters, continue to Section 5.4 entitled "CONFIGURATION".

5.3 – NORMAL OPERATION

Under *Normal* operation the VELTRON DPT-*plus* display will continuously indicate current process variables or other selected parameters.

AUTO-zero. At periodical intervals* (see Factory Set-Up Information Sheet) the AUTO-zero cycle will be initiated. When this occurs, the display values and outputs will remain constant and zero will appear in the upper right of the display for the duration of the AUTO-zero cycle.

This cycle will not occur if AUTO-zero has been turned OFF in configuration programming (see Section 5.9).

The AUTO-zero cycle can be manually activated by user (if ON in configuration programming) by simultaneously pressing (X) and (↑). Cover must be removed to gain access to pushbuttons (see Section 5.4).

If zero remains on after the AUTO-zero cycle is complete or flashes rapidly, refer to Section 8 - Troubleshooting for required action.

*Note:
- The interval clock for AUTO-zero cycles is initiated when the VELTRON DPT-*plus* power is turned on. The time intervals (preset in User Setup menu) will then start their timing sequence.
- To reset the interval clock, turn power off for a minimum of 10 seconds, then turn power back on. Interval clock will then initiate at time zero.
- Changing the interval selection in User Setup does not reset time clock.

AUTO-purge. If the AUTO-purge option has been enabled at the factory (see Factory Set-Up Information Sheet), it will be activated at periodic intervals determined by the "smart relay" (located in the AUTO-purge panel) programming. When activated, display will be frozen and all outputs will remain constant, and purg will appear in the upper right of the display for the duration of the purge cycle. Length of cycle depends on purge duration and after-purge duration (see Factory Set-Up Information Sheet).

Alarms. If the Alarm option has been enabled at the factory (see Factory Set-Up Information Sheet) and process conditions exist to activate the alarm, the alrm will appear in the display and corresponding alarm relay will be energized (after set delay time).

5.4 – CONFIGURATION

The VELTRON DPT-*plus* onboard microprocessor controls Configuration: Operating parameter selection; input/output activation and scaling, display scaling, and transducer calibration.

The customer can verify configuration and change certain parameters (within defined ranges) by entering the VELTRON DPT-*plus* Configuration mode. This is accomplished using the four pushbuttons located beneath the VELTRON DPT-*plus* display end cover.

To gain access to the programming pushbutttons, the cover must be removed.

CAUTION: With cover removed, ESD (electrostatic discharge) precautions should be observed at all times to protect sensitive components.

5.5 – PUSHBUTTON DEFINITION

The four pushbuttons used to interface with the VELTRON DPT-*plus* are identified by their symbols. The symbols are defined as follows:

↑: UP ↓: DOWN ↵: ENTER X: ESCAPE

In addition to Configuration programming, pushbuttons can be used for certain functions when in the *Normal* operation mode. The following list describes the pushbutton function when in the *Normal* operation mode and in the User Setup (programming).

When in Normal Operation Mode.

X + ↑ Manually activates AUTO-zero (if AUTO-zero is ON).

↑ + ↓ Displays VELTRON DPT-*plus* and software version number. Toggle action, depressing both again causes the display to go back to the *Normal* operation mode.

↵ then ↵ Activates the User Setup menu.

When in User Setup.

↑ or ↓ Use to scroll to the desired Main Menu item.
Use to scroll to the value or mode within a parameter.

↵ Enters user into specific selection sub-menu from Main Menu Selection.
Displays current setting of selected Parameter. Enters the selected value or setting into memory.

X Use as an escape key to exit Main Menu selection to avoid scrolling to "Return to MAIN MENU".
Use as a quick way to advance to the last item selected when USER SETUP MAIN menu is selected if the last item selected was exited using the ↵ key.

The following pushbutton combinations can be used to more quickly set user selected values (i.e. site elevation, inlet area, Alarm Setpoints, Characterization Values, etc.).

↑* + X Increase the second column digit.

↓* + X Decrease the second column digit.

↑* + ↓ Increase the third column digit.

↓* + ↑ Decrease the third column digit.

↑* + X and ↓ Increase the fourth column digit.

↓* + X and ↑ Decrease the fourth column digit.

XXXXX
2nd Column
3rd Column
4th Column

*Must be pressed and held before other button(s) are pressed.

Note: Pushbuttons are momentary type and should be quickly pressed and released to initiate desired change, unless otherwise instructed to press and hold.

5.6 – CONFIGURATION PROGRAMMING

Note: User selectable parameters are limited to standard features and those available for options installed at the factory. The following will detail all user parameters, which may or may not be available on your unit.

With power ON and initialization complete (see Section 5.2), press ↵ and display will indicate:

USER SETUP

Pressing ↵ will enter the user into the Main Menu of configuration programming. The display will indicate:

Transmitter Scaling
and Configuration

By using ↑ and ↓, the user can scroll through the following selections:

MAIN MENU SELECTION	DESCRIPTION
Transmitter Scaling & Configuration	Allows for the configuration of process variable such as: Density Compensation Type, Square root, process type, process minimum/ maximum/units, duct area, percent lockdown, and Temperature configuration. Also offers a Flow/D.P. calculator that allows user to calculate maximum flow or differential pressure based on entered variables.
Low Pass Filter Selection	Selects amount of filtering applied to transducer output.
AUTO-zero Configuration	Turns AUTO-zero function ON or OFF, and selects activation interval.
AUTO-purge Configuration	Refer to AUTO-purge Installation, Operation & Maintenance Manual for configuration information.
Alarm Configuration	Turns alarm function ON or OFF, select Alarm Type, High and Low Setpoints, Deadband selection, and Alarm Delay.
K-Factor Configuration	Turns K-Factor ON or OFF, and allows for the calculation or selection of gain and bias values.
Display Configuration	Allows for the configuration of Display Parameters and Filters.
Analog Output Configuration	Allows for the selection of Analog Output 2 parameter.
Transducer Span Selection	Allows for displaying the natural span of the installed transducer, and selecting the operating span.
Transmitter Input Calibration	Allows for the zeroing and spanning transmitter analog Inputs.
Transmitter Output Calibration	Allows for the zeroing and spanning of transmitter analog Outputs.
Transducer Characterization Selection	Allows transducer characterization data to be entered when transducer is replaced.
Display Internal Temperature	Allows for displaying the internal temperature of the VELTRON DPT-*plus* unit.
Perform Transmitter Reset	Allows for restarting the transmitter in case of lock-up.
Exit User Setup	Returns display to *Normal* operation.

5.6 – CONFIGURATION PROGRAMMING (con't)

Once the desired Selection is displayed, its sub-menu can be entered by pressing ↵ .

To better understand the process of Configuration Programming, arrows with pushbutton designations have been included on the following flow chart of AUTO-zero Configuration. This will aid in the navigation of the Configuration Programming Process.

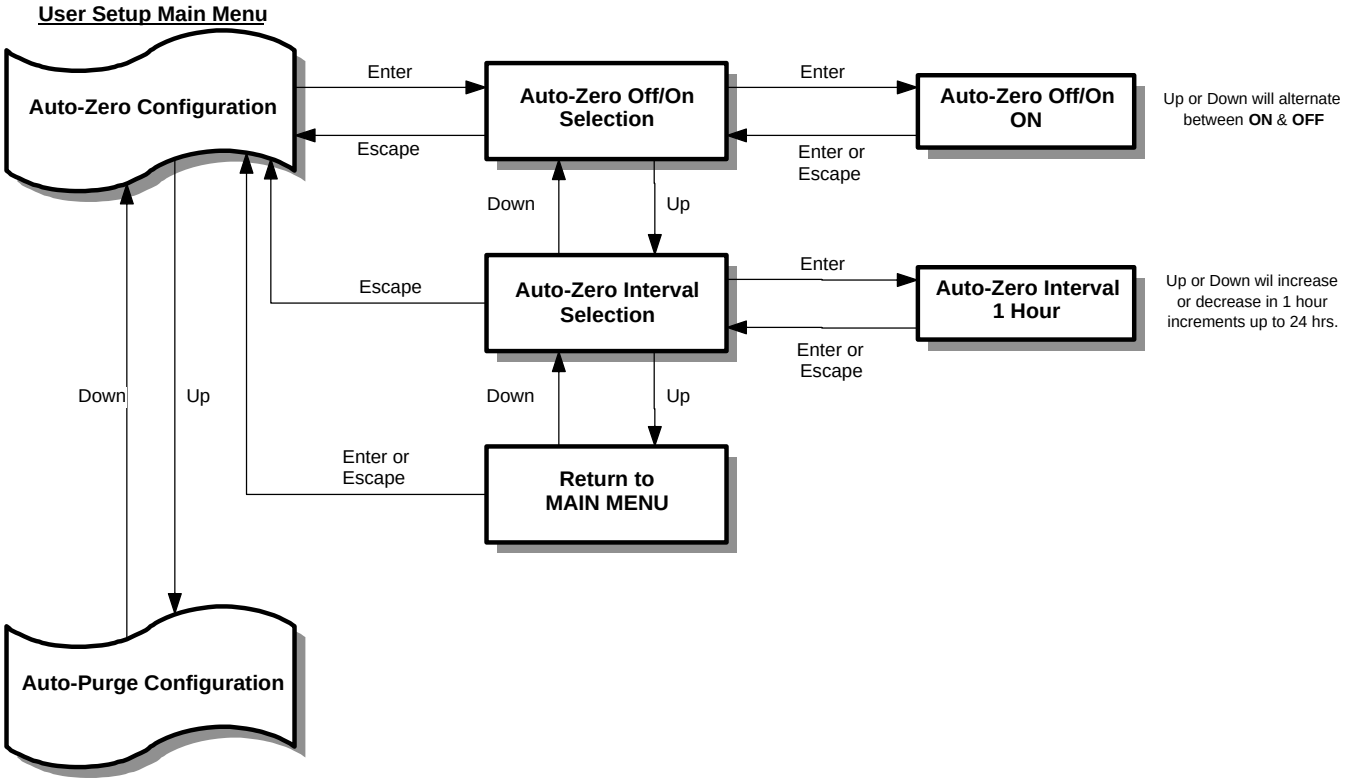

This example of navigation is similar for all Main Menu selections.

Note: All selections that are available for further configuration programming will have an "arrow" symbol displayed in the right side of the display field. Those that are not available for further configuration programming will not have the arrow symbol displayed and will display NOT INSTALLED beneath the selection description. Example:

AUTO-purge Not Installed

The remainder of this Section details steps to verify or change Configuration Programming of all Main Menu Selections.

At any time while in the Main Menu, User can return to *Normal* operation mode by pressing Ⓧ or scrolling to:

EXIT User Setup

and pressing ↵ .

5.7 – TRANSMITTER SCALING & CONFIGURATION

This Main Menu selection is where all application specific data is entered to configure the VELTRON DPT-*plus* for a unique application. Data is entered in sub-menu, Process Configuration, and as applicable, sub-menu, Temperature Configuration. Typical data includes: Process Type, Process Minimum/Maximum, Density Compensation Type, Temperature Range, Duct Area/Units, etc.

Note: Factory has entered data in this section based on customer supplied information. Data can be reviewed and verified by scrolling through the individual menu items or reviewing the Factory Set-Up Information sheet at the end of this Manual. Review this information **BEFORE** making any changes, as they can have a significant effect on the operation of the VELTRON DPT-*plus*.

Under a third sub-menu, Calculator for Max Diff. Pres. or Flow, user can calculate either maximum flow or maximum differential pressure (D.P.) when operating parameters have changed. Values entered in this section will have no effect on normal operation unless user enters YES in the Update Values section (see below).

Each sub-menu will be addressed separately.

5.7 – TRANSMITTER SCALING & CONFIGURATION (con't)

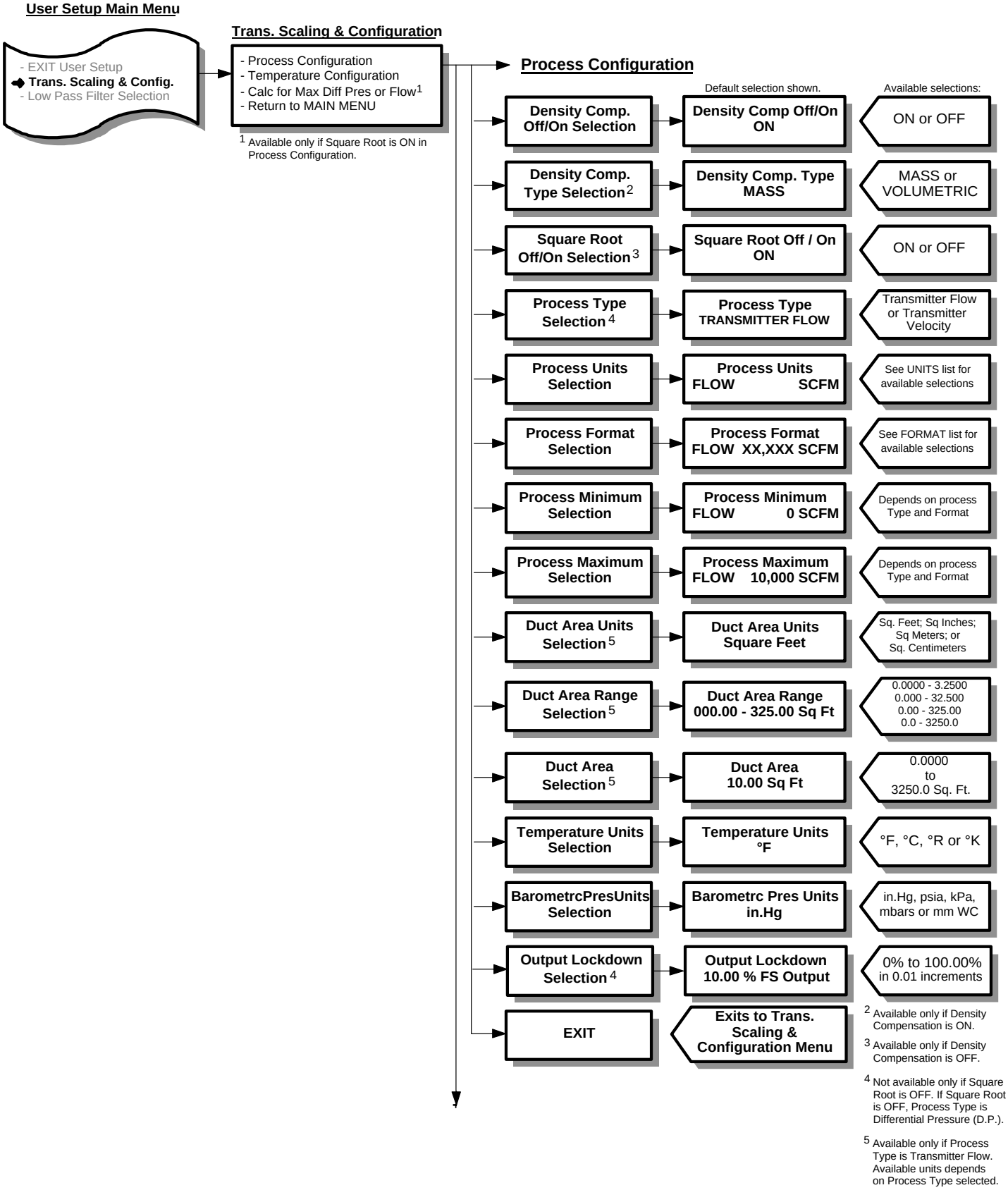

5.7 – TRANSMITTER SCALING & CONFIGURATION (con't)

1. While in Main Menu, use ⬆ or ⬇ to scroll to:

Transmitter Scaling and Configuration

2. Press ↵ to enter Transmitter Scaling & Configuration menu. Display will indicate:

Process Configuration

3. Press ↵ to enter the Process Configuration sub-menu. Display will indicate:

Density Comp. Off On Selection

4. Press ↵ and display will indicate current setting of Density Compensation (OFF or ON).

5. Use ⬆ or ⬇ to change setting. Once desired setting is displayed, press ↵, new setting will be stored in memory and display will return to Process Configuration sub-menu as in Step 3.

   Note: If user desires <u>not</u> to change the setting and return to the Process Configuration sub-menu, press X. Unit will remain programmed as it was originally.

6. Use ⬆ or ⬇ to select remaining parameters to be changed within the Process Configuration sub-menu.

   See the following Units Lists for the available Process Units selections for the appropriate Process Type.
   See the following Format List for the available Process Format selections.

7. Follow Step 5 to make any changes to parameters.

8. To return to the Transmitter Scaling & Configuration menu, select EXIT in the Process Configuration sub-menu and press ↵.

Note: If Process Minimum is selected to be a value greater than zero (0), Output 1 and 2 (if Transmitter is selected as output) will not increase until the actual process exceeds this selected value. This is known as "Zero Suppression".

Zero Suppression (Process Minimum) can be set up to 60% of the Process Maximum selected.

Display of process is not affected by this selection, and will indicate the actual process value.

5.7 – TRANSMITTER SCALING & CONFIGURATION (con't)

	UNITS LIST For Process Type – Flow	
	UNIT OF MEASUREMENT	**DISPLAY**
NOTE 1	cubic feet per second	CFS
	cubic feet per minute	CFM
	cubic feet per hour	CFH
	liters per second	l/s
	liters per minute	l/m
	liters per hour	l/hr
	cubic meters per second	m3/s
	cubic meters per minute	m3/m
	cubic meters per hour	m3/hr
NOTES 1 & 2	Actual cubic feet per second	ACFS
	Actual cubic feet per minute	ACFM
	Actual cubic feet per hour	ACFH
	Actual liters per second	Al/s
	Actual liters per minute	Al/m
	Actual liters per hour	Al/hr
	Actual cubic meters per second	Am3/s
	Actual cubic meters per minute	Am3/m
	Actual cubic meters per hour	Am3/h
	Percent	%
NOTES 1 & 3	Standard cubic feet per second	SCFS
	Standard cubic feet per minute	SCFM
	Standard cubic feet per hour	SCFH
	Standard liters per second	Sl/s
	Standard liters per minute	Sl/m
	Standard liters per hour	Sl/hr
	Standard cubic meters per second	Sm3/s
	Standard cubic meters per minute	Sm3/m
	Standard cubic meters per hour	Sm3/h
	Normal liters per second	Nl/s
	Normal liters per minute	Nl/m
	Normal liters per hour	Nl/hr
	Normal cubic meters per second	Nm3/s
	Normal cubic meters per minute	Nm3/m
	Normal cubic meters per hour	Nm3/h
	pounds per second	lb/s
	pounds per minute	lb/m
	pounds per hour	lb/hr
	Tons per hour	T/hr
	Tons per day	T/day
	grams per second	gm/s
	kilograms per hour	kg/hr
	Percent	%

Notes:

1. All units listed are available if Density Compensation is OFF.
2. Only these units are available if Density Compensation is ON and Type is Volumetric.
3. Only these units are available if Density Compensation is ON and Type is Mass.

5.7 – TRANSMITTER SCALING & CONFIGURATION (con't)

	UNITS LIST for Process Type – Velocity	
	UNIT OF MEASUREMENT	**DISPLAY**
NOTE 1	feet per second	FPS
	feet per minute	FPM
	feet per hour	FPH
	meters per second	m/s
	meters per minute	m/m
	meters per hour	m/hr
NOTES 1 & 2	Actual feet per second	AFPS
	Actual feet per minute	AFPM
	Actual feet per hour	AFPH
	Actual meters per second	Am/s
	Actual meters per minute	Am/m
	Actual meters per hour	Am/hr
	Percent	%
NOTES 1 & 3	Standard feet per second	SFPS
	Standard feet per minute	SFPM
	Standard feet per hour	SFPH
	Standard meters per second	Sm/s
	Standard meters per minute	Sm/m
	Standard meters per hour	Sm/hr
	Normal meters per second	Nm/s
	Normal meters per minute	Nm/m
	Normal meters per hour	Nm/hr
	Percent	%

Notes:

1. All units listed are available if Density Compensation is OFF.
2. Only these units are available if Density Compensation is ON and Type is Volumetric.
3. Only these units are available if Density Compensation is ON and Type is Mass.

5.7 – TRANSMITTER SCALING & CONFIGURATION (con't)

UNITS LIST for Process Type – Differential Pressure	
UNIT OF MEASUREMENT	**DISPLAY**
inches of water column	in.WC
inches of mercury	in.Hg
pounds per square inch, gauge	psig
Pascals	Pa
kilo Pascals	kPa
bars	bars
millibars	mbars
millimeter of water column	mm WC
millimeter of mercury	mm Hg
kilograms per square meter	kg/m2
Percent	%

FORMAT LIST	
.0XXXXX	(–.025000 to .025000)
0.XXXXX	(–0.25000 to 0.25000)
X.XXXX	(–2.5000 to 2.5000)
XX.XXX	(–25.000 to 25.000)
XXX.XX	(–250.00 to 250.00)
X,XXX.X	(–2,500.0 to 2,500.0)
XX,XXX	(–25,000 to 25,000)
XXX,XX0	(–250,000 to 250,000)
XXXX,X00	(–2500,000 to 2500,000)
XXXX,000	(–9999,000 to 9999,000)

5.7 – TRANSMITTER SCALING & CONFIGURATION (con't)

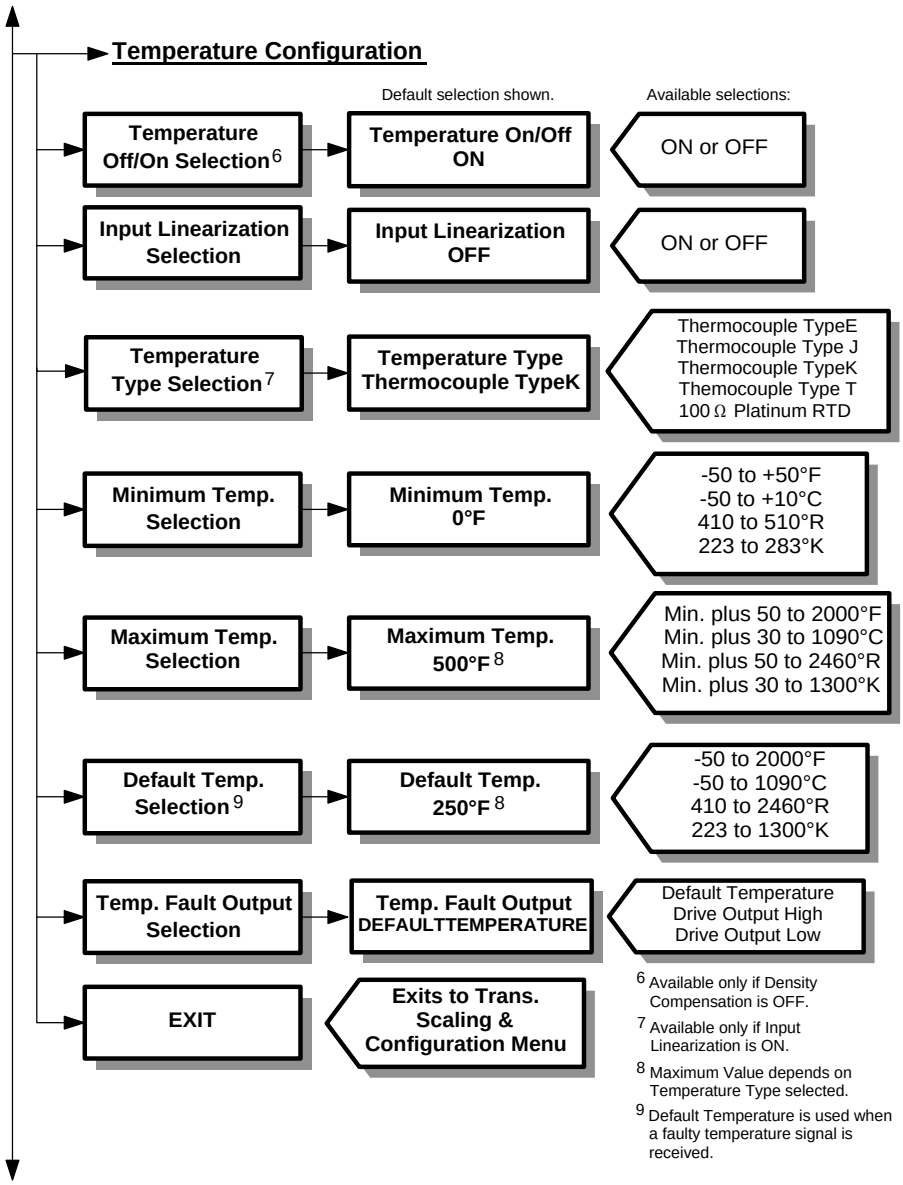

9. While in Transmitter Scaling & Configuration menu, use ⬆ or ⬇ to scroll to:

Temperature Configuration

10. Press ↵ to enter the Temperature Configuration sub-menu.

    If Density Compensation is ON (see Process Configuration above), display will indicate:

Input Linearization Selection

    If Density Compensation is OFF display will indicate:

Temperature Off/On Selection

11. Press ↵ and display will indicate current selection of applicable menu from Step 10.

5.7 – TRANSMITTER SCALING & CONFIGURATION (con't)

12. Use ⬆ or ⬇ to change setting. Once desired setting is displayed, press ↵, new setting will be stored in memory and display will return to the Temperature Configuration sub-menu as in Step 10.

    Note: If user desires <u>not</u> to change the setting and return to the Temperature Configuration sub-menu, press X. Unit will remain programmed as it was originally.

13. Use ⬆ or ⬇ to select remaining parameters to be changed within the Temperature Configuration sub-menu.

14. Follow Step 12 to make any changes to parameters.

15. To return to the Transmitter Scaling & Configuration menu, select EXIT in the Temperature Configuration sub-menu and press ↵ .

5.7 – TRANSMITTER SCALING & CONFIGURATION (con't)

User should not need to use the following Calculator unless:

a. Process parameters have changed and new Differential Pressure or Flow values are needed.

b. Mid-point operating Differential Pressure or Flow values are wanted.

c. It is desired to implement a single-point density compensation for process temperature and/or absolute pressure that is significantly different than standard conditions (68ºF and 29.92" Hg).

Values entered in this section will have no effect on normal operation unless user enters YES in the Update Flow/ Operating Span Value menu item (see below).

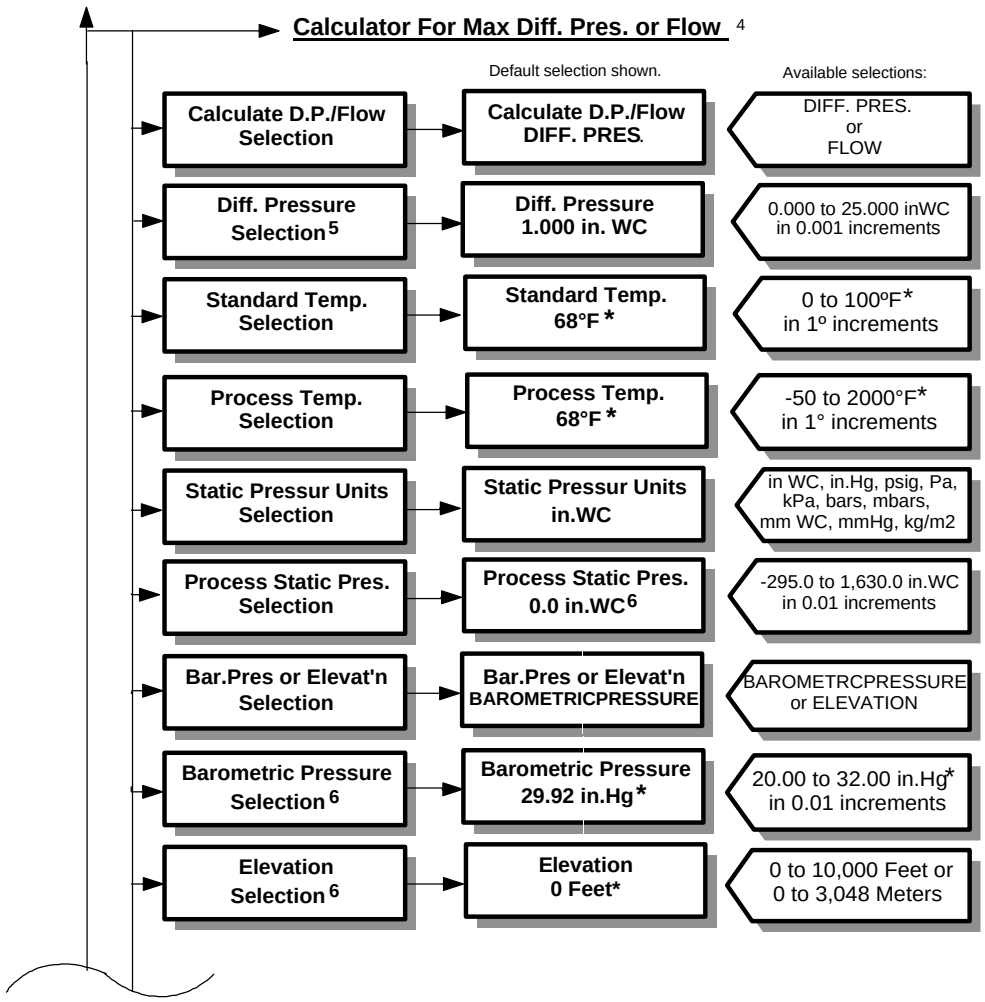

Continued on next page

5.7 – TRANSMITTER SCALING & CONFIGURATION (con't)

Continued from next page

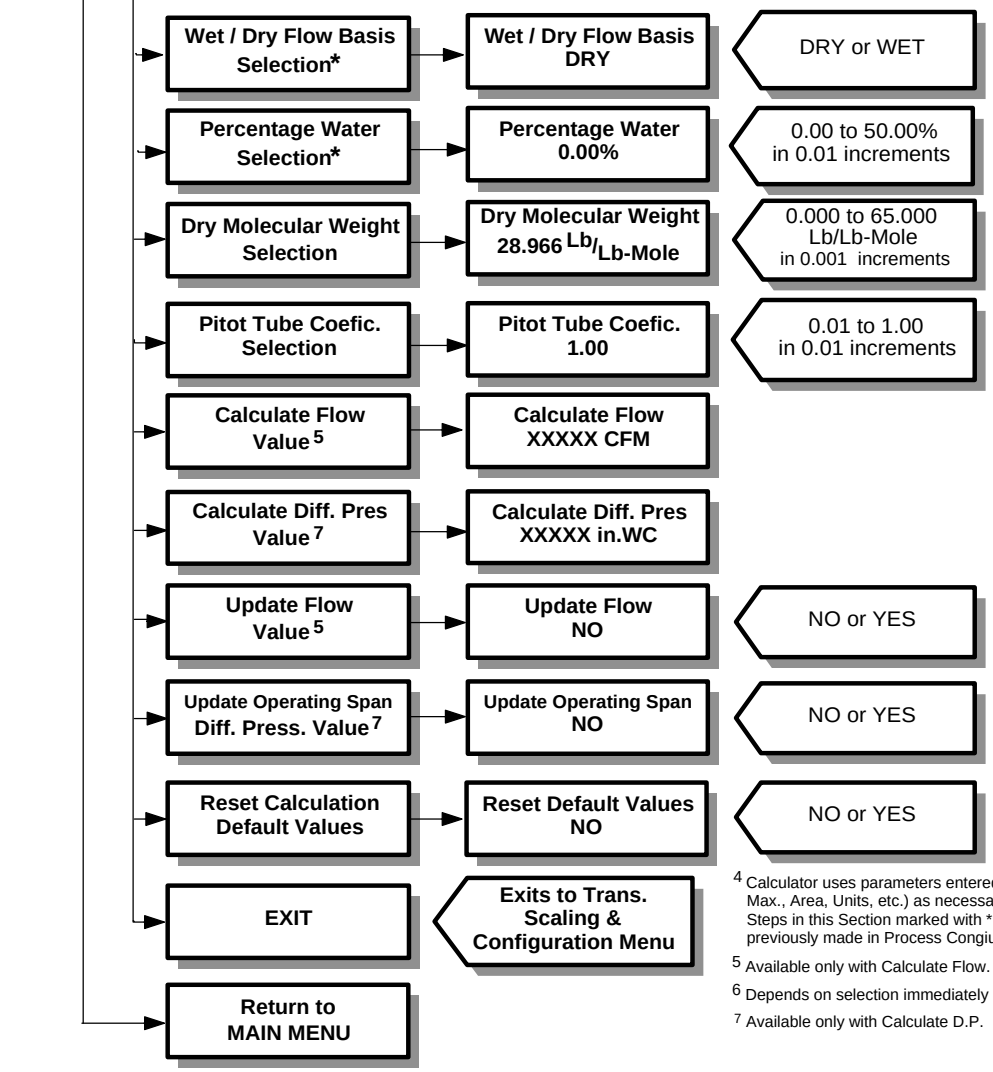

4 Calculator uses parameters entered in Process Configuration (ie.Type, Max., Area, Units, etc.) as necessary to perform calculation. Steps in this Section marked with * indicate values or choices previously made in Process Congiuration.

5 Available only with Calculate Flow.

6 Depends on selection immediately above.

7 Available only with Calculate D.P.

5.7 – TRANSMITTER SCALING & CONFIGURATION (con't)

As an example of how to utilize the calculator, the following shows how to change the Operating Span if the process temperature is 150ºF.

16. While in Transmitter Scaling & Configuration menu, use ↑ or ↓ to scroll to:

Calculator for Max Diff. Pres. or Flow

17. Press ↵ to enter the Calculator for Max Diff. Pres. or Flow sub-menu. Display will indicate:

Calculate D.P./Flow Selection

18. Press ↵ and display will indicate:

Calculate D.P./Flow DIFF. PRES.

19. Press ↵ and ↑ twice and display will indicate:

Process Temperature Selection

20. Press ↵ and use ↑ button until temperature reads 150ºF.

21. Press ↵ and scroll to:

Calculate Diff. Pres Value

22. Press ↵ and a new value for Differential Pressure will be displayed.

23. Press ↵ and ↑ and display will read:

Update Operating Span Diff. Pres. Value

24. Press ↵, scroll to YES and press ↵, display will return to that shown in Step 16, and new operating span will be stored in memory.

    Note: If during this step, display indicated CAL. SPAN NOT UPDATED NAT. SPAN TOO LOW or HIGH, new span is less than 40% or greater than 100% of the natural span of the transducer installed. User should contact Factory for further assistance (see section 10.0).

25. To return to the Transmitter Scaling & Configuration menu, select EXIT in the Calculator for Max Diff. Pres. or Flow sub-menu and press ↵ .

26. To return to the Main Menu, select Return to MAIN MENU in the Transmitter Scaling & Configuration menu and press ↵ .

5.8 – LOW PASS FILTER

User can select level of filtering applied to the transducer output*. Levels are 0 to 8, with 0 representing no filtering and 8 representing maximum filtering.

* This filtering affects all subsequent outputs, displays, alarms, etc., that utilize the transducer output.

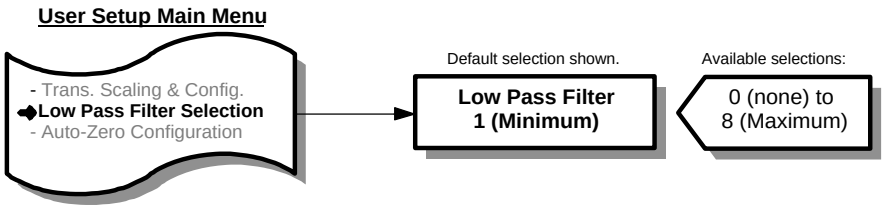

1. While in Main Menu, use ⬆ or ⬇ , to scroll to: Low Pass Filter Selection

2. Press ↵ and display indicates current setting of Low Pass Filter; 0 (none) to 8 (Maximum).

3. Use ⬆ or ⬇ to change setting. Once desired setting is displayed, press ↵, new setting will be stored in memory and display will return to Main Menu.

   Note: If user desires not to change the setting and return to Main Menu, press X. Unit will remain programmed as it was originally.

5.9 – AUTO-zero CONFIGURATION

User can turn AUTO-zero function ON or OFF, and select activation interval.

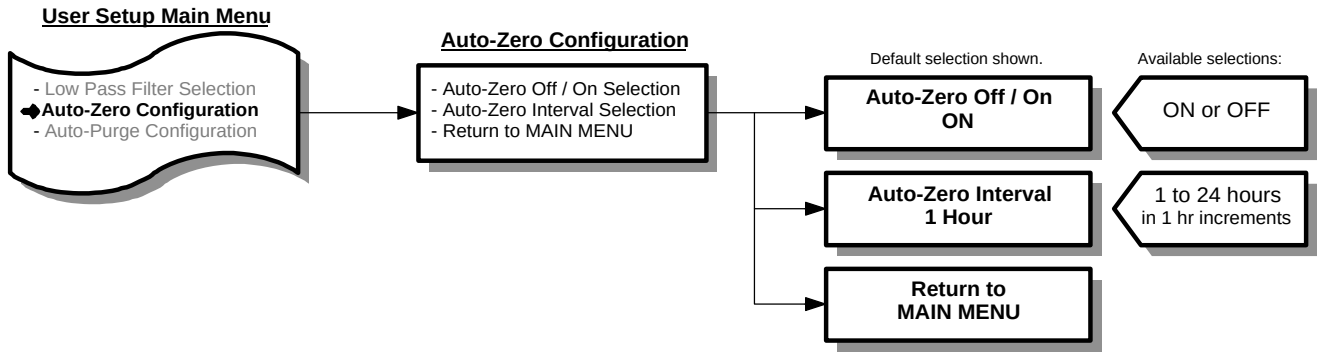

1. While in Main Menu, use ⬆ or ⬇ to scroll to: | Auto-Zero Configuration |
2. Press ↵ to enter AUTO-zero Configuration menu. Display will indicate: | Auto-Zero Off/On Selection |
3. Press ↵ and display will indicate current setting of AUTO-zero (OFF or ON).
4. Use ⬆ or ⬇ to change setting. Once desired setting is displayed, press ↵, new setting will be stored in memory and display will return to AUTO-zero Configuration menu as in Step 2.

   Note: If user desires <u>not</u> to change the setting and return to AUTO-zero Configuration menu, press Ⓧ. Unit will remain programmed as it was originally.
5. Use ⬆ or ⬇ to select remaining parameters to be changed.
6. Follow Step 4 to make any changes to parameters.
7. To return to Main Menu, select Return to MAIN MENU in AUTO-zero Configuration menu and press ↵.

5.10 – AUTO-purge CONFIGURATION

Refer to AUTO-purge Installation, Operation & Maintenance Manual for configration information.

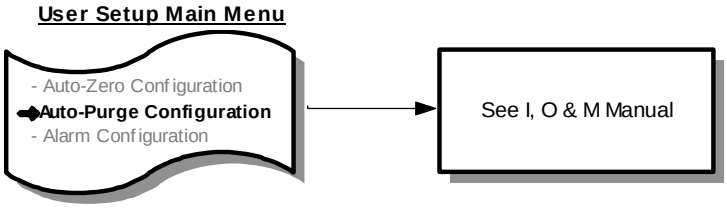

5.11 – ALARM CONFIGURATION

User can turn Alarm function ON or OFF, select type of alarm (See Section 3.5 – Features for description of the different Alarm types), and set the following values:

Low Setpoint (this is Low, Low1, or High1 depending on Alarm Type): Selected value of transmitter span, below (for Low and Low1) or above (for High 1) which an alarm condition will exist. Value is selected in same units as transmitter format.

High Setpoint (this is High, Low2, or High2, depending on Alarm Type): Selected value of transmitter span below (for Low2) or above (for High and High2) which an alarm condition will exist. Value is selected in same units as transmitter format.

Alarm Deadband: Value that transmitter signal has to reach above (for Low, Low1, or Low2) or below (for High, High1, or High2) before an activated alarm will reset. Value is selected in same units as transmitter span.

Alarm Delay: Time between an alarm condition existing and alarm activation. Adjustable between 0.0 and 10.0 minutes in 0.1 minute increments.

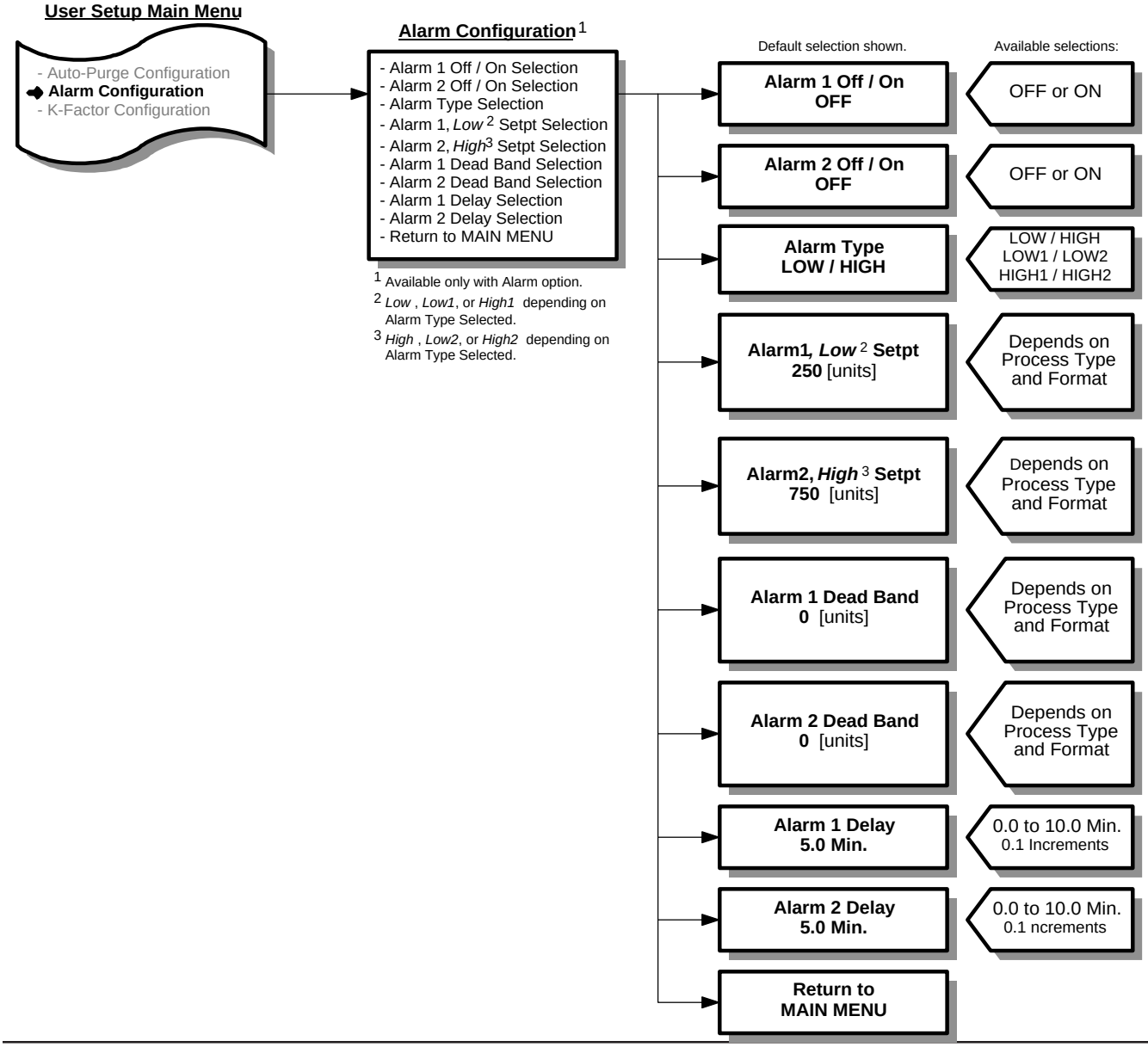

5.11 – ALARM CONFIGURATION (con't)

1. While in Main Menu, use ⬆ or ⬇ to scroll to:

Alarm Configuration

2. Press ↵ to enter Alarm Configuration menu. Display will indicate:

Alarm 1 Off/On Selection

3. Press ↵ and display will indicate current setting of Alarm (OFF or ON).

4. Use ⬆ or ⬇ to change setting. Once desired setting is displayed, press ↵. New setting will be stored in memory and display will return to Alarm Configuration menu as in Step 2.

   Note: If user desires <u>not</u> to change the setting and return to Alarm Configuration menu, press X. Unit will remain programmed as it was originally.

5. Use ⬆ or ⬇ to select remaining parameters to be changed.

6. Follow Step 4 to make any changes to parameters.

7. To return to Main Menu, select Return to MAIN MENU in Alarm Configuration menu and press ↵.

5.12 – K-FACTOR CONFIGURATION

Caution
In the majority of applications, the use of a K-Factor is neither required nor desirable. Before using the K-Factor feature, contact the Service Department (see Section 10) to review the application and obtain assistance in determining the K-Factor gain and bias values.

User can turn K-Factor function ON or OFF, select a K-Factor gain value and K-Factor bias value. The K-Factor gain is a number applied as a multiplier to the output and the K-Factor bias is an offset added to the output.

Note: If K-Factor is ON, K on will appear in the upper right of the display.

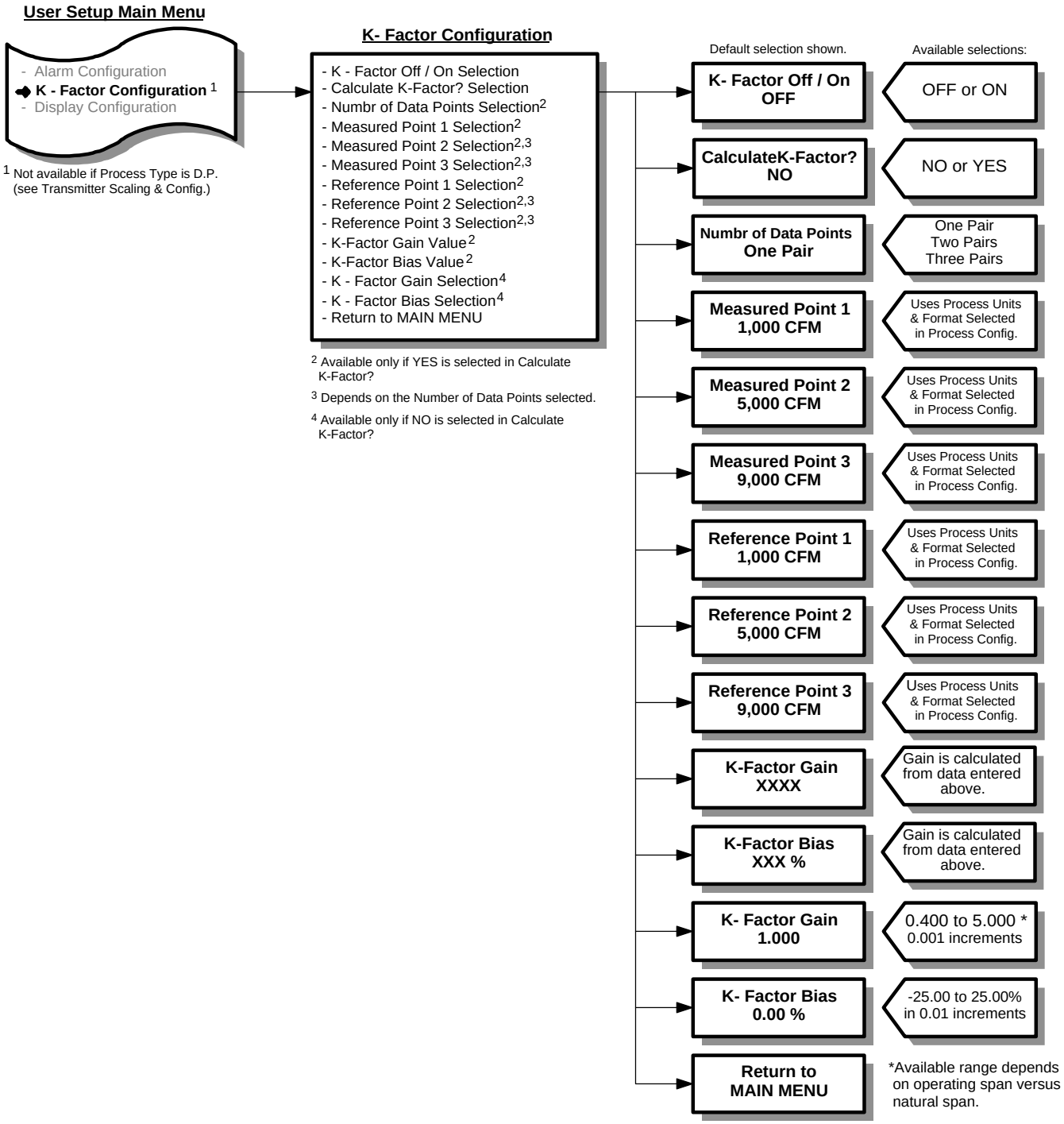

5.12 – K-FACTOR CONFIGURATION (con't)

1. While in Main Menu, use ⬆ or ⬇ to scroll to:

K-Factor Configuration

2. Press ↵ to enter K-Factor Configuration menu. Display will indicate:

K-Factor Off/On Selection

3. Press ↵ and display will indicate current setting of K-Factor (OFF or ON).
4. Use ⬆ or ⬇ to change setting. Once desired setting is displayed, press ↵. New setting will be stored in memory and display will return to K-Factor Configuration menu as in Step 2.

   Note: If user desires <u>not</u> to change the setting and return to K-Factor Configuration menu, press X. Unit will remain programmed as it was originally.
5. Use ⬆ or ⬇ to select remaining parameters to be changed.
6. Follow Step 4 to make any changes to parameters.
7. To return to Main Menu, select Return to MAIN MENU in parameter menu and press ↵.

5.13 –DISPLAY CONFIGURATION

User can select display parameter, for lines 2 and 3. Also, each line can have a level of filtering, 0 through 4 (4 is maximum) selected by User.

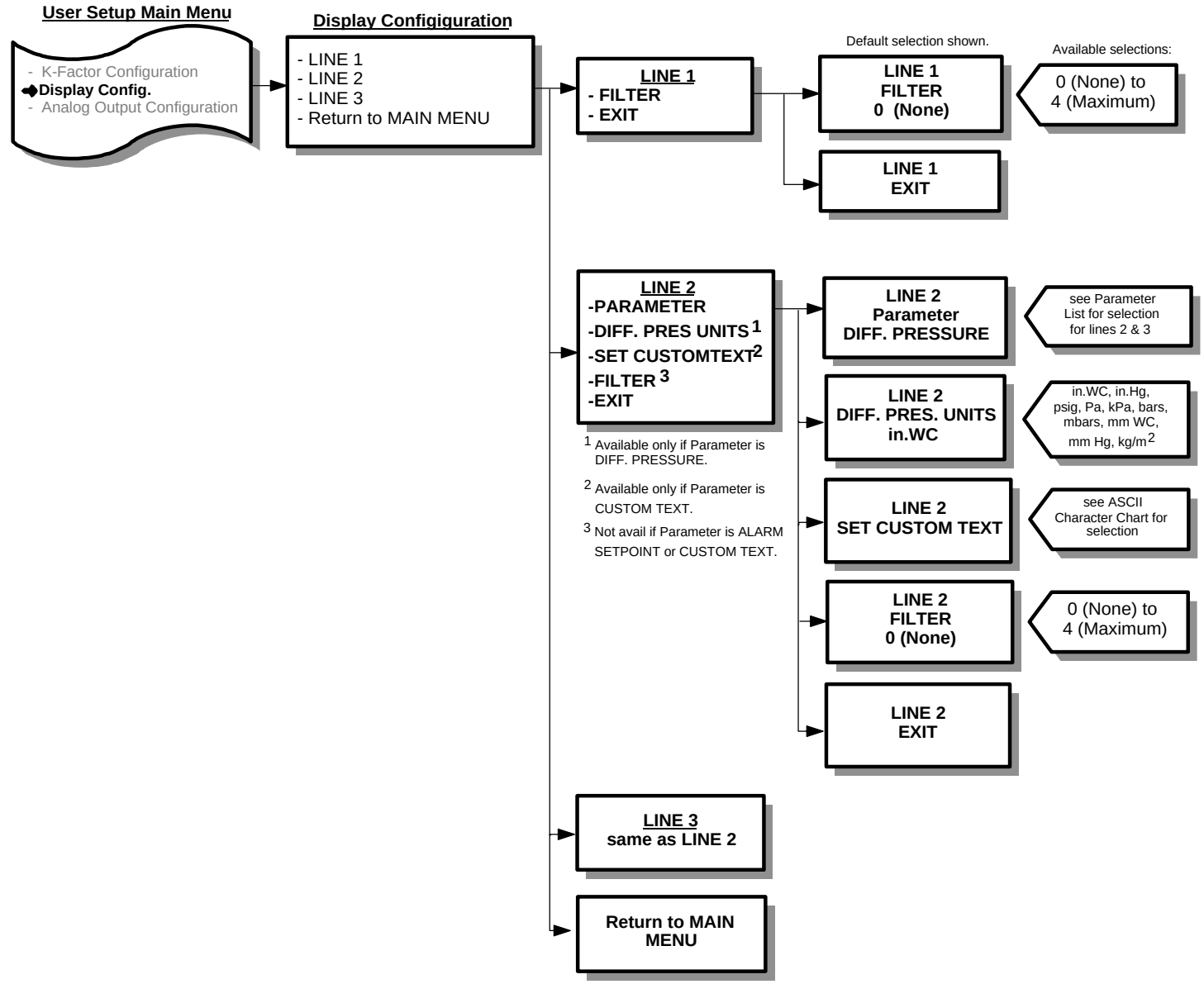

5.13 –DISPLAY CONFIGURATION

1. While in Main Menu, use ⬆ or ⬇ to scroll to:

Display Configuration

2. Press ↵ to enter Display Configuration menu. Display will indicate:

LINE 1

3. Press ↵ to enter Setup menu. Display will indicate:

LINE 1 FILTER

4. Press ↵, and display will indicate current setting of the filter [0 (None), 1 (Minimum), 2, 3, or 4 (Maximum)].

5. Use ⬆ or ⬇ to change setting. Once desired setting is displayed, press ↵. New setting will be stored in memory and display will return to Display Configuration menu as in Step 3.

   Note: If user desires <u>not</u> to change the setting and return to Display Configuration menu, press Ⓧ. Unit will remain programmed as it was originally.

6. Press ⬆ and display will indicate:

LINE 1 EXIT

7. Press ⬆ then ⬇ and display will indicate:

LINE 2

5.13 – DISPLAY CONFIGURATION (con't)

8. Press ↵ and display will indicate:

LINE 2 PARAMETER

9. Press ↵ and display will indicate current parameter selected to display on Line 2 (see Parameter List at the end of this section for available selections).

10. Use ↑ or ↓ to scroll to desired parameter. Press ↵ and parameter will be stored in memory and display will indicate as in Step 8.

    Note: If user desires <u>not</u> to change the setting and return to Setup menu, press X. Unit will remain programmed as it was originally.

11. If CUSTOM TEXT was selected and ↵ pressed in Step 10, proceed to Step 20. For other parameters, continue with Step 12.

12. Press ↑ and display will indicate:

LINE 2 FILTER

    Note: This selection is available only if Parameter selected is Temperature or Diff Pressure.

13. Press ↵ and display will indicate current Filter setting selected for Line 1 [1 (None), 2 (Minimum), 3, 4, or 5 (Maximum)].

14. Use ↑ or ↓ to scroll to desired filter setting. Press ↵ and filter setting will be stored in memory and display will indicate as in Step 12.

15. Press ↑ and display will indicate:

LINE 2 EXIT

16. Press ↵ then ↑ and display will indicate:

LINE 3

17. Repeat Steps 8 through 16 for Line 3. The only differences being the change of Line # in the display.

18. After Line 3 has been set, Step 16 will yield a display:

Return to MAIN MENU

19. Press ↵ to return to Main Menu.

20. If Custom Text was selected and ↵ pressed in Step 10 (for line 2 or 3), press ↑ and display will indicate:

LINE 2 SET CUSTOM TEXT

5.13 – DISPLAY CONFIGURATION (con't)

21. Press ↵, display will indicate:

LINE 2 SET CUSTOM TEXT

Cursor indicates position to be set. There are 20 positions available to hold custom text.

22. Use ↑ or ↓ to scroll through available characters (see ASCII Chart at the end of this section for available characters).

23. When desired character is displayed, press ↵, character will be stored and arrow will advance one position to the right.

24. Repeat Steps 22 and 23 for all 20 positions. When position 20 is entered, user will be exited back to display as in Step 20.

25. Press ↑ and display will indicate:

LINE 2 EXIT

26. Press ↵ or ↑ and display will indicate:

LINE 3

27. Repeat Steps 8 through 16 for Line 3. The only difference being the change of Line # in the display.

Note: In "Set Custom Text" mode, the pushbuttons can be used in the following combinations to facilitate programming:

X + ↑ : Moves position cursor to the right, one position at a time.

X + ↓ : Moves position cursor to the left, one position at a time.

X + ↵ : Exits "Set Custom Text". Does not enter any changes to the display since the last time ↵ was pressed.

↑ + ↓ : Jumps up five characters at a time, to the desired character.

↓ + ↑ : Jumps down five characters at a time, to the desired character.

5.13 – ENHANCED DISPLAY CONFIGURATION (con't)

PARAMETER LIST for Lines 2, 3, and 4	
PARAMETER	**DISPLAY in "NORMAL" MODE**
NONE	
DIFF. PRESSURE*	D. PRESS
TRANSMITTER VELO ●	VELO.
TEMPERATURE	TEMP
ALARM LOW SETPOINT ♦	LO SP
ALARM HIGH SETPOINT ♦	HI SP
ALARM LOW1 SETPOINT ♦	LO1 SP
ALARM LOW2 SETPOINT ♦	LO2 SP
ALARM HIGH1 SETPOINT ♦	HI1 SP
ALARM HIGH2 SETPOINT ♦	HI2 SP
BARGRAPH of Process	XX%
CUSTOM TEXT	

* Available only if Square Root Function is ON.
● Available only if Transmitter Flow is selected as Process Type.
♦ Available only if Alarm Function has been installed.

ASCII Character Chart										
!	*	3	<	E	N	W	`	i	r	{
"	+	4	=	F	O	X	a	j	s	|
#	,	5	>	G	P	Y	b	k	t	}
$	—	6	?	H	Q	Z	c	l	u	´
%	.	7	@	I	R	[	d	m	v	±
&	/	8	A	J	S	\	e	n	w	
'	0	9	B	K	T	]	f	o	x	
(	1	:	C	L	U	^	g	p	y	
)	2	;	D	M	V	__	h	q	z	

5.14 – ANALOG OUTPUT CONFIGURATION

User can select which process variable Output 2 represents.

Process variables available for output are:
- Transmitter Differential Pressure
- Transmitter Flow
- Temperature (only if temperature is a parameter used in Density Compensation)

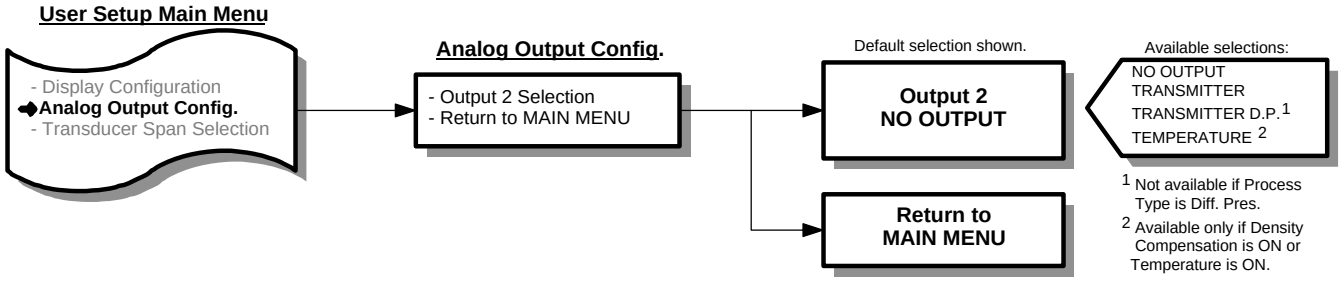

1. While in Main Menu, use ⬆ or ⬇ to scroll to:

Analog Output Configuration

2. Press ↵ to enter Analog Output Configuration menu. Display will indicate:

Output 2 Selection

3. Press ↵ and display will indicate current setting of Analog Output #2 (NO OUTPUT, TRANSMITTER, TRANSMITTER D.P., TEMPERATURE).

4. Use ⬆ or ⬇ to change setting. Once desired setting is displayed, press ↵. New setting will be stored in memory and display will return to Analog Output Configuration menu as in Step 2.

   Note: If user desires <u>not</u> to change the setting and return to Analog Output Configuration menu, press X. Unit will remain programmed as it was originally.

5. To return to Main Menu, select Return to MAIN MENU in Analog Output Configuration menu and press ↵.

5.15 – TRANSDUCER SPAN SELECTION

Displays the transducer's natural span and operating span. The natural span represents the maximum process pressure that the transducer can accept. The displayed natural span is for user/technician reference only and should not be changed unless a new transducer of different natural span has been installed.

The operating span represents the calculated process pressure for a specific application, and can be adjusted 40% to 100% of the natural span.

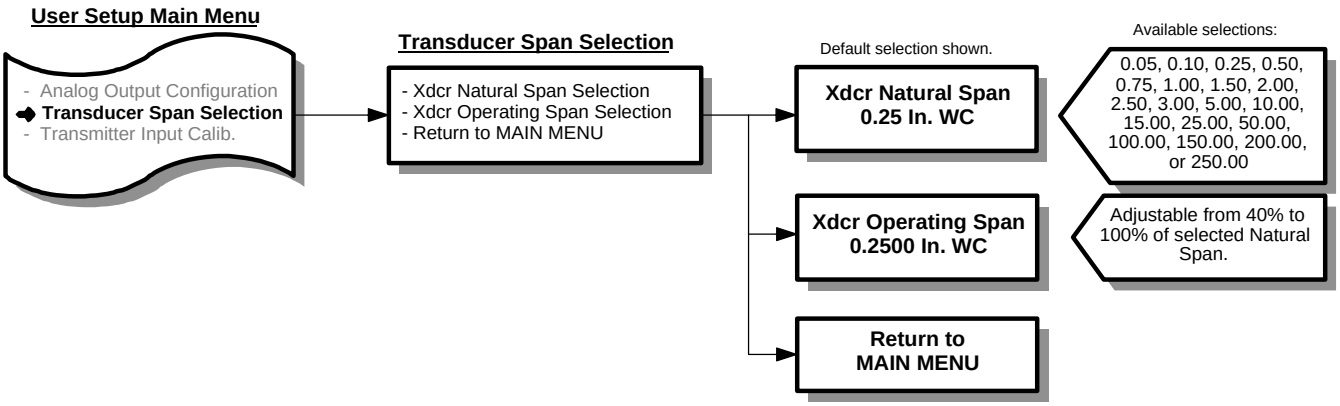

1. While in Main Menu, use ⬆ or ⬇ to scroll to:

Transducer Span Selection

2. Press ↵ to enter Transducer Span Selection menu. Display will indicate:

Xdcr Natural Span Selection

3. Press ↵ and display indicates the natural span of the installed transducer (0.05, 0.10, 0.25, 0.50, 0.75, 1.00, 1.50, 2.00, 2.50, 3.00, 5.00,10.00, 15.00, or 25.00, or 50.00, IN w.c.).

4. Use ⬆ or ⬇ to change setting. Once desired setting is displayed, press ↵. New setting will be stored in memory and display will return to Main Menu.

Caution: Only change setting if a transducer of different natural span has been installed.

   Note: If user desires <u>not</u> to change the setting and return to Main Menu, press X. Unit will remain programmed as it was originally.

5. Use ⬆ or ⬇ to select remaining parameters to be changed.

6. Follow Step 4 to make any changes to parameters.

7. To return to Main Menu, select Return to MAIN MENU in Transducer Span Selection Menu and press ↵.

Note: If unit is configured as bi-polar, Xdcr Natural Span selections will be in the form of ±x.xx, and Xdcr Operating Span will have a Min and Max selection.

5.16 – TRANSMITTER INPUT CALIBRATION

See Section 6.3 – Calibration for details on Transmitter Input Calibration.

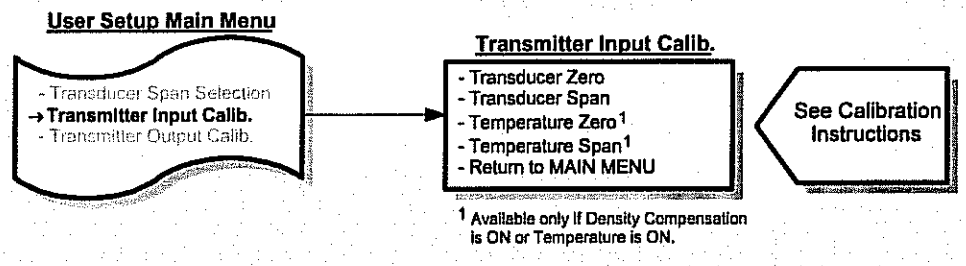

5.17 – TRANSMITTER OUTPUT CALIBRATION

See Section 6.4 – Calibration for details on Transmitter Output Calibration.

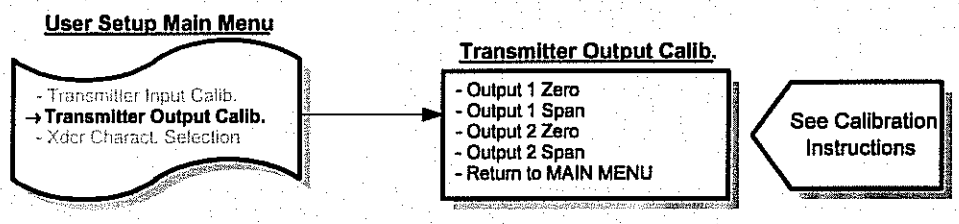

5.18 – TRANSMITTER CHARACTERIZATION SELECTION

Allows user to enter unique transducer characterization data when the transducer has been changed.

CAUTION:
- User should not make any changes to the data entered in the following menu items.
- This data has been entered by the Factory for the specific transducer installed in the unit.
- Only if the transducer is replaced by the user should new data be entered.
- This new data along with instructions will be provided with the new transducer from the Factory.

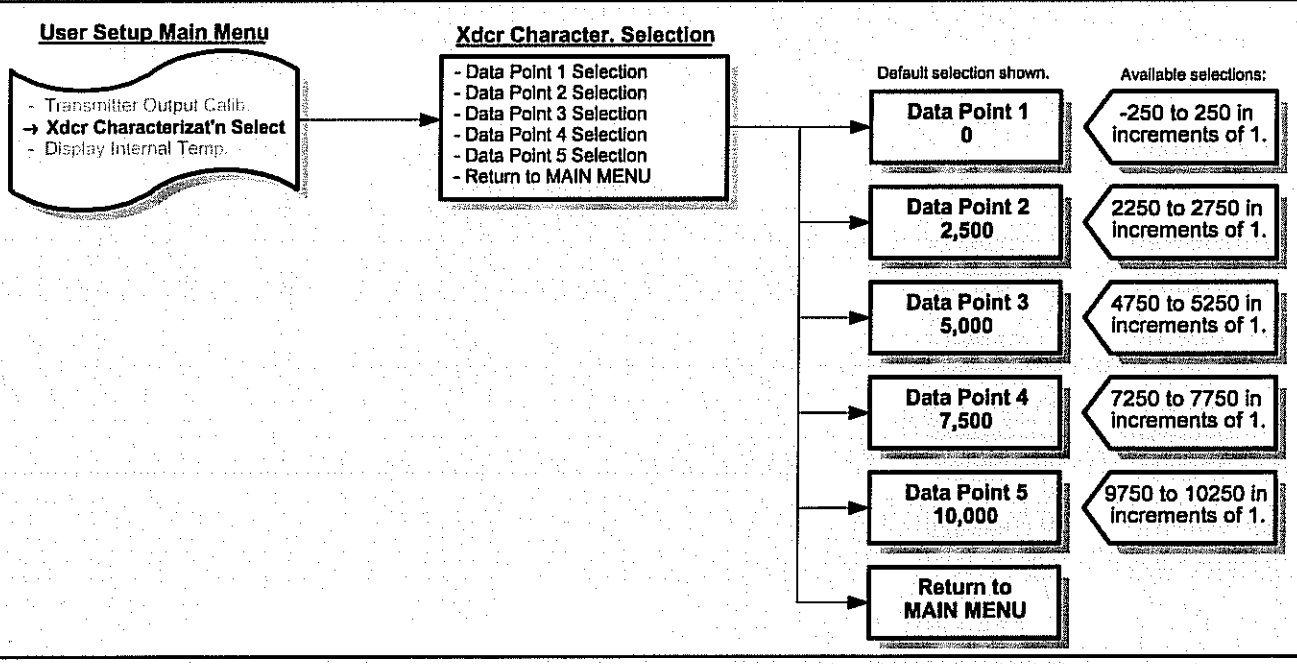

5.19– DISPLAY INTERNAL TEMPERATURE

Allows User to display current internal temperature of the VELTRON DPT-*plus*.

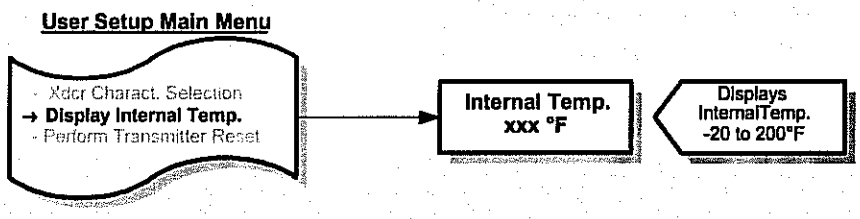

1. While in Main Menu, use ⬆ or ⬇ to scroll to: Display Internal Temp
2. Press ↵ and display will indicate current internal temperature (–20 to 200°F).
3. Press ⓧ and display will return to Main Menu.

5.20– TRANSMITTER RESET

Allows User to reset (restart) the transmitter if unit is locked-up or not responding to commands.

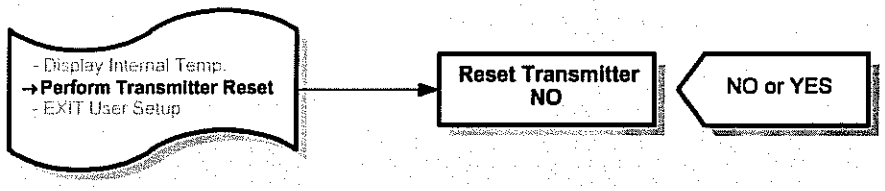

1. While in Main Menu, use ⬆ or ⬇ to scroll to: Perform Transmitter Reset
2. Press ↵ and display will indicate: Reset Transmitter NO
3. If User desires to perform reset, press ⬆ to scroll to YES, and press ↵. Transmitter will restart and display will indicate as outlined in section 5.2. When complete, transmitter will be in *Normal* operation mode.

6 – CALIBRATION

This section will detail steps necessary to calibrate the VELTRON DPT-*plus*. Calibration is accomplished using the four programming push buttons detailed in Section 5.

This section can be accomplished with the VELTRON DPT-*plus* mounted in its operating location or at a test bench in a calibration lab.

If calibrated at a test bench, the VELTRON DPT-*plus* should be positioned in the same attitude as in its operating location.

6.1 – REQUIRED EQUIPMENT

1. Digital Manometer capable of reading to the nearest 0.001" w.c.
2. Digital Multimeter.
3. Source of clean, dry instrument air.
4. Adjustable low pressure regulator, such as AMC "Low Pressure Air Source" or equal.
5. Temperature simulator or current generator.

6.2 – PREPARATION

1. Turn Power to the VELTRON DPT-*plus* OFF.
2. Remove both covers of the VELTRON DPT-*plus.*
3. Slide switch S1-"AZ Valve" to the ON position (see Section 9 for location).
4. Remove Low and High pressure signal lines to the VELTRON DPT-*plus*.
5. Remove all wires connected to terminals 1 through 10 (see Figure 4.4).
6. Prepare test equipment as shown in Figure 6.1.
7. Turn Power ON.

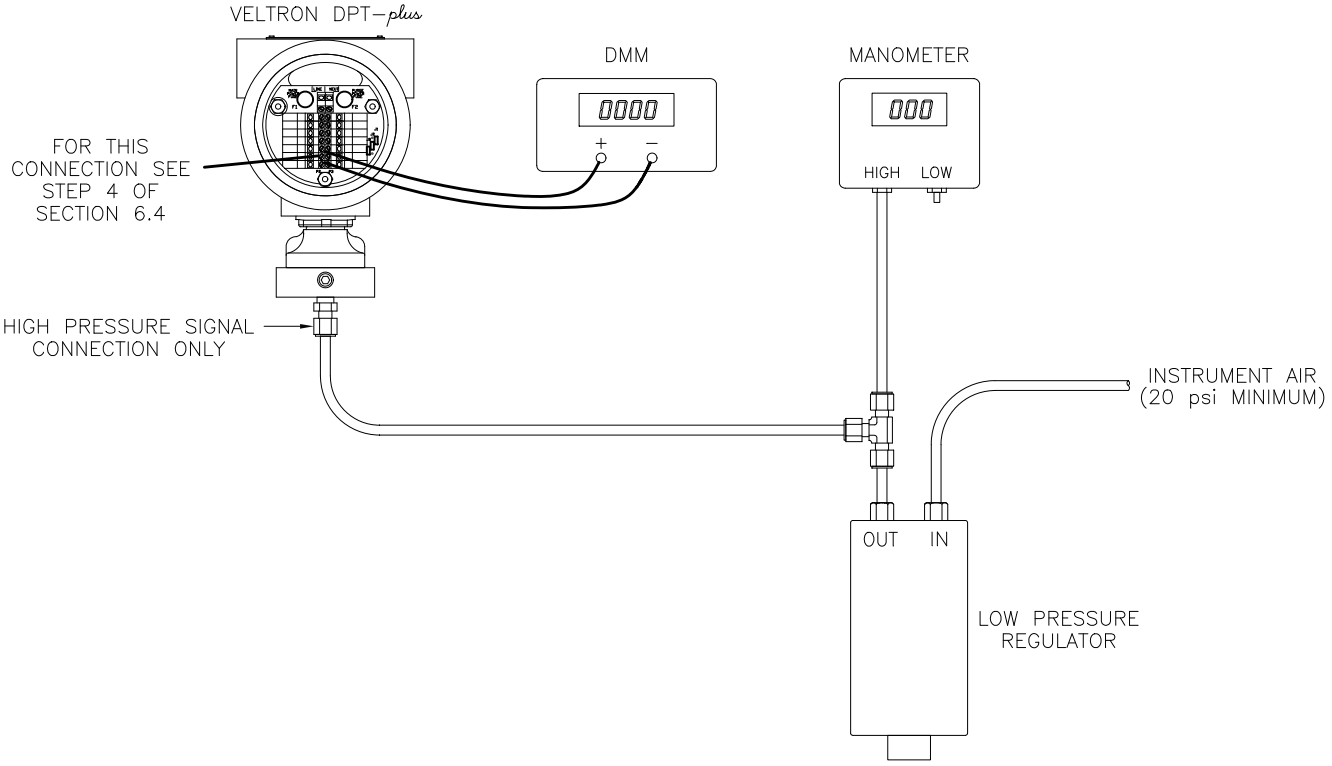

Figure 6.1

6.3 – TRANSMITTER INPUT CALIBRATION

6.3.1 For Units With Positive or Negative Differential Pressure Spans.

Zero pressure and transducer natural span pressure will be applied to the VELTRON DPT-*plus*, unit will be programmed to recognize these pressures as zero and span for transmitter input calibration.

1. While in Main Menu, scroll to:

Transmitter Input Calibration

2. Press ↵, and display will indicate:

Transducer Zero Calib: 0.00 in.WC

3. Press ↵, and display will indicate:

Transducer Zero -- Push ENTER --

4. Slide switch S1 - "AZ Valve" to the ON position.

5. Press ↵, and display will indicate:

Transducer Zero Settle Time:4

Display will count down to 0, after which it will indicate:

Input Zero Done -- Push ESCAPE --

6. Press X and then ↑, display will indicate:

Transducer Span Calib: X.XX in.WC

7. Slide switch S1 - "AZ Valve" to the OFF position.

8. Apply input pressure (as read on manometer) to the High port of the VELTRON DPT-*plus*. Adjust pressure to equal the transducer natural span value, which is indicated on the display.

9. Press ↵, and display will indicate:

Transducer Span -- Push ENTER --

10. Press ↵, and display will indicate:

Transducer Span Settle Time:4

Display will count down to 0, after which it will indicate:

Input Span Done -- Push ESCAPE --

Note: If pressure input is less than 40% or greater than 110% of transducer's Natural span value (see Factory Set-Up Information Sheet), display will indicate:

Bad Input Span -- Push ESCAPE --

If this occurs, check input pressure (as read on manometer), and readjust as necessary. Press X and repeat Steps 7 through 10.

6.3 – TRANSMITTER INPUT CALIBRATION (con't)

6.3.1 (con't)

11. Remove input pressure from High port on VELTRON DPT-*plus*.

12. Press (X) and then (↑), and depending on whether Temperature is being used as a process Parameter, display will indicate either:

Temperature Zero Calib: XXX ºF	or	Return to MAIN MENU

13. If Temperature is used, proceed with Step 14. If not, proceed with Step 22.

14. If temperature signal is provided by temperature device, connect a current generator across Terminals 11 and 2 (see Figure 4.8). If temperature signal is powered by VELTRON DPT-*plus*, connect a loop powered temperature simulator across Terminals 11 and 12 (see Figure 4.9).

15. Adjust temperature signal for minimum value of temperature input value, which is indicated on the display.

16. Press (↵), and display will indicate:

Temperature Zero Settle Time:4 Sec

Display will count down to 0, after which it will indicate:

Input Zero Done -- Push ESCAPE --

17. Press (X) and then (↑), display will indicate:

Temperature Span Calib: XXX ºF

18. Adjust temperature signal for maximum value of temperature input value, which is indicated on the display.

19. Press (↵), and display will indicate:

Temperature Span -- Push ENTER --

20. Press (↵), and display will indicate:

Temperature Span Settle Time:4 Sec

Display will count down to 0, after which it will indicate:

Input Span Done -- Push ESCAPE --

Note: If span input is less than 80% or greater than 120% of Temperature maximum input (see Factory Set-Up Information Sheet), display will indicate:

Bad Input Span -- Push ESCAPE --

If this occurs, check input signal and readjust as necessary. Press (X) and repeat Steps 18 through 20.

21. Press (X) and then (↑), display will indicate:

Return to MAIN MENU

22. Press (↵), and display will return to Main Menu.

6.3 – TRANSMITTER INPUT CALIBRATION (con't)

6.3.2 For Units With Bi-Polar Spans.

Minimum and maximum transducer natural span pressure will be applied to the VELTRON DPT-*plus*, unit will be programmed to recognize these pressures as zero and span for transmitter input calibration.

1. Connect input pressure to Low port of VELTRON DPT-*plus*.
2. While in Main Menu, scroll to:

Transmitter Input Calibration

3. Press ↵, and display will indicate:

Transducer Zero Calib: –X.XX in.WC

4. Slide switch S1 - "AZ Valve" to the OFF position.
5. Apply input pressure (as read on manometer) to the Low Port of the VELTRON DPT-*plus*. Adjust pressure to equal the positive equivalent of the minimum (negative) transducer natural span value, which is indicated on the display.
6. Press ↵, and display will indicate:

Transducer Zero -- Push ENTER --

7. Press ↵, and display will indicate:

Transducer Zero Settle Time:4

Display will count down to 0, after which it will indicate:

Input Zero Done -- Push ESCAPE --

8. Press X and then ↑, display will indicate:

Transducer Span Calib: +X.XX in.WC

9. Connect input pressure to the High port of the VELTRON DPT-*plus*.
10. Apply input pressure (as read on manometer) to the High Port of the VELTRON DPT-*plus*. Adjust pressure to equal the maximum (positive) transducer natural span value, which is indicated on the display.
11. Press ↵, and display will indicate:

Transducer Span -- PUSH ENTER --

12. Press ↵ , and display will indicate:

Transducer Span Settle Time:4

Display will count down to 0, after which it will indicate:

Input Span Done -- Push ESCAPE --

Note: If pressure input is less than 40% or greater than 110% of transducer's maximum (positive) Natural span value range (see Factory Set-Up Information Sheet), display will indicate:

Bad Input Span -- Push ESCAPE --

If this occurs, check input pressure (as read on manometer), and readjust as necessary. Press X and repeat Steps 9 through 12.

6.3 – TRANSMITTER INPUT CALIBRATION (con't)

6.3.2 (con't)

13. Remove input pressure from High port on VELTRON DPT-*plus*.

14. Press (X) and then (↑), and depending on whether Temperature is being used as a process Parameter, display will indicate either:

Temperature Zero Calib: XXX ºF	or	Return to MAIN MENU

15. If Temperature is used, proceed with Step 16. If not, proceed with Step 24.

16. If temperature signal is provided by temperature device, connect a current generator across Terminals 11 and 2 (see Figure 4.8). If temperature signal is powered by VELTRON DPT-*plus*, connect a loop powered temperature simulator across Terminals 11 and 12 (see Figure 4.9).

17. Adjust temperature signal for minimum value of temperature input, which is indicated on the display.

18. Press (↵), and display will indicate:

Temperature Zero Settle Time:4 Sec

Display will count down to 0, after which it will indicate:

Input Zero Done -- Push ESCAPE --

19. Press (X) and then (↑), display will indicate:

Temperature Span Calib: XXX ºF

20. Press (↵), and display will indicate:

Temperature Span -- Push ENTER --

21. Adjust temperature signal for maximum value of temperature input, which is indicated on the display.

22. Press (↵), and display will indicate:

Temperature Span Settle Time:4 Sec

Display will count down to 0, after which it will indicate:

Input Span Done -- Push ESCAPE --

Note: If span input is less than 80% or greater than 120% of Temperature maximum input (see Factory Set-Up Information Sheet), display will indicate:

Bad Input Span -- Push ESCAPE --

If this occurs, check input signal and readjust as necessary. Press (X) and repeat Steps 20 through 22.

23. Press (X) and then (↑), display will indicate:

Return to MAIN MENU

24. Press (↵), and display will be in Main Menu.

6.4 – TRANSMITTER OUTPUT CALIBRATION

1. Scroll Main Menu to: | Transmitter Output Calibration |
2. Press ↵, and display will indicate: | Output 1 Zero |
3. Press ↵, and display will indicate: | Output 1 Zero
Perform Calibration |
4. Connect a DMM set for mADC in series with Output 1 (see Section 4.5). DMM should be reading minimum value of 4.00 ± 0.01mA.
5. If DMM is reading out of tolerance, use ↑ or ↓ to adjust VELTRON DPT-*plus* output for an acceptable DMM reading.

   Depending on DMM's selected range, the ↓ or ↑ button may need to be pressed and held for a period of time before any change occurs in the DMM's display. To speed up changes in output, pushbutton combinations can be used. The following chart lists these combinations along with the associated change in output.

PUSHBUTTON COMBINATION	4-20mA
↑ only	+0.001mA
↓ only	–0.001mA
↑* + X	+0.01mA
↓* + X	-0.01mA
↑* + ↓	+0.1mA
↓* + ↑	–0.1mA
↑* + X and ↓	+1.0mA
↓* + X and ↑	–1.0mA

*Must be pressed and held before other button(s) are pressed.

6.4 – TRANSMITTER OUTPUT CALIBRATION (con't)

6. Once an acceptable zero reading is obtained, press ↵ and then ↑ and display will indicate:

Output 1 Span

7. Press ↵, and display will indicate:

Output 1 Span Perform Calibration

8. With DMM still connected as in Step 4, reading should be at maximum value of 20.00 ± 0.01mA.

9. If DMM is reading out of tolerance, use ↑ or ↓ to adjust VELTRON DPT-*plus* output for an acceptable DMM reading.

10. Once an acceptable span reading is obtained, press ↵ and then ↑ and display will indicate.

Output 2 Zero

11. Repeat Steps 3 through 10 for Analog Output 2.

12. Press ↑ until display indicates:

Return to MAIN MENU

13. Press ↵ and scroll Main Menu to:

EXIT User Setup

14. Press ↵ and VELTRON DPT-*plus* will return to Normal mode of operation.

7 – MAINTENANCE

The VELTRON DPT-*plus* is a solid state device having few mechanical parts requiring special periodic maintenance. The following maintenance steps are not requirements, but guidelines for establishing a maintenance program for your specific installation.

Operating experience should be used to set frequency of specific types of maintenance.

7.1 – CLEANLINESS

– Verify condensation (or other sources of liquids) are not present inside the VELTRON DPT-*plus*.

7.2 – MECHANICAL

– Verify pressure signal connections are secure.
– Inspect pressure signal lines for any cracks or leaks.
– Verify mounting hardware is secure.

7.3 – ELECTRICAL

– Periodically inspect all wiring to the VELTRON DPT-*plus* for good connections and absence of corrosion.

7.4 – CALIBRATION

– VELTRON DPT-*plus* should have calibration verified annually as a minimum.

8 – TROUBLESHOOTING

Personnel should be familiar with the operation of the VELTRON DPT-*plus* (see Section 5) before performing any troubleshooting.

Note: Prior to performing any troubleshooting, turn power OFF. After 10 seconds, turn power switch ON. If problem still exists, proceed with troubleshooting steps.

Problem	***Solution***
No Display and "CPU Activated" ● is not blinking.	– Verify input power is present at the correct voltage as listed on label and connected to Terminals 15 and 16. – Check fuse F1 (see Figure 4.4 for location).
No output or incorrect output (Output 1 or 2) and display responding correctly with process change.	– Review Factory Set-Up Information Sheet for type of output (isolated or non-isolated). – Check terminal strip wiring for proper installation. – Perform Transmitter Output Calibration (see Section 6).
No output or incorrect output (Output 1 or 2) and display not responding or correctly with process change.	– Verify pressure signal lines are connected correctly. – Verify AUTO-zero valve switch is in the OFF position. – Check for leaky or obstructed lines between VELTRON DPT-*plus* and process sensor. – Check for kinked internal signal pressure lines in transmitter base.
AUTO-zero Function is not working.	– Verify AUTO-zero is ON and interval is properly set (see Section 5.9). – Verify AUTO-zero valve switch is in the OFF position.
zero is continuously lit.	– Zero value measured during AUTO-zero cycle is between 90 and 100% of span. Transmitter Input Calibration should be performed as soon as possible (see Section 6.3).
zero is flashing rapidly.	– Zero value measured during AUTO-zero cycle is greater than 100% of span. Transmitter Input Calibration should be performed immediately (see Section 6.3).
Alarms not working.	– Verify that Alarm is ON and setpoints are set to correct value (see Section 5.11). – Check for proper terminal strip wiring and connections (see Section 4.5).
Process Signal is Unreliable is displayed on Line 1 of display.	– Verify pressure signal lines are connected correctly (see Section 4.4). – Verify process is operating within design parameters specified on Factory Set-Up Sheet.
Unreliable is displayed on Line selected to display Temperature.	– Verify temperature signal is connected properly according to the type of temperature device (see Section 4.5). – Verify temperature signal from temperature device is a 4.0-20.0mADC type. – Verify temperature device is operating correctly.

If after following the Troubleshooting steps the VELTRON DPT-*plus* continues to operate improperly, contact the Service Department for further assistance (see Section 10).

9 – PARTS LIST

- The following drawing with part numbers list components of the VELTRON DPT-*plus* that are easily replaced by the user.
- To inquire about price and availability of a specific part number, please contact the Customer Service Department at:

Phone: 1-707-544-2706 Fax: 1-707-526-2825
1-800-AIRFLOW

- When contacting the Customer Service Department about parts, please have the applicable Factory Set-Up Information sheet available for reference.

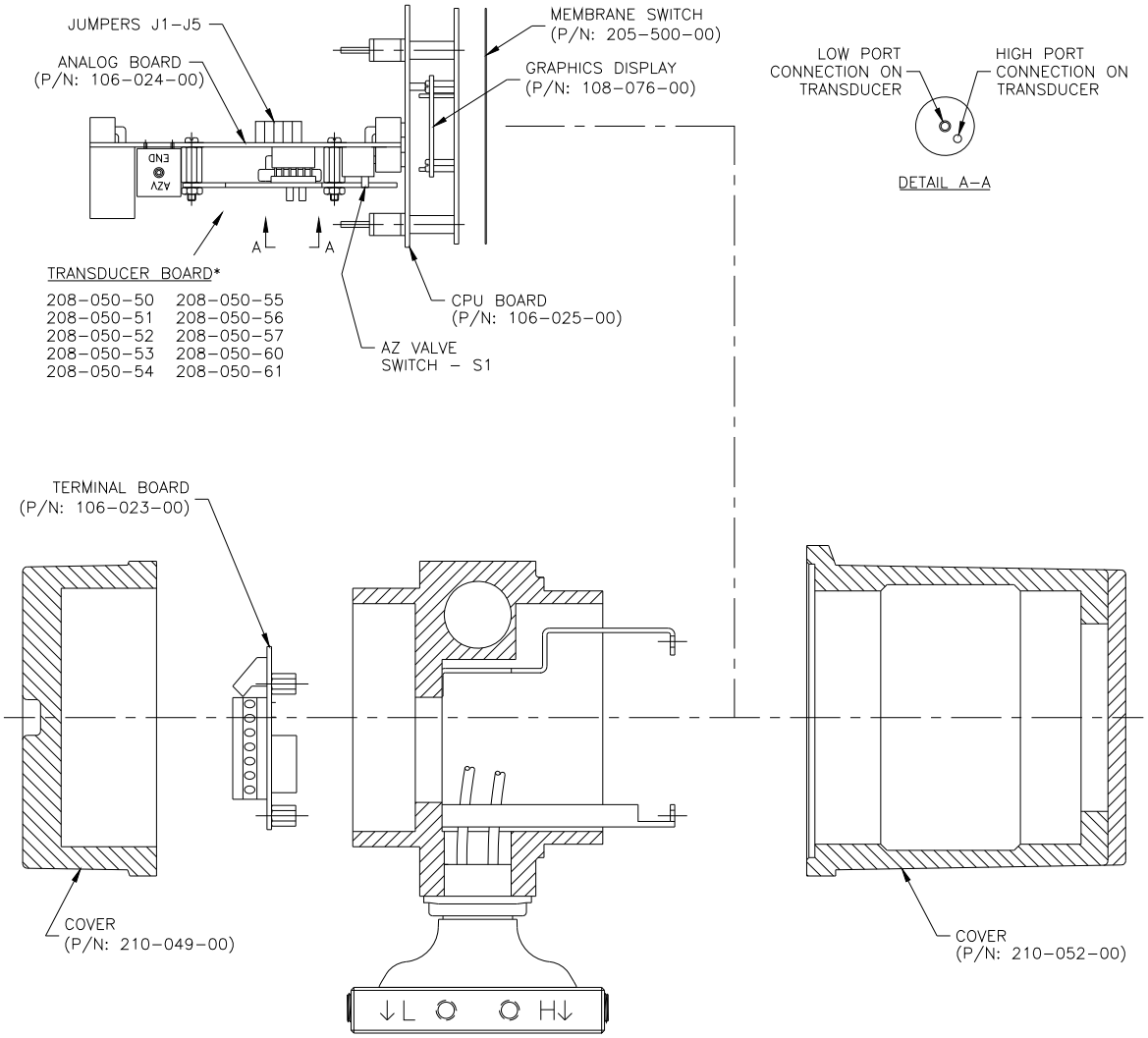

*NOTE: REFER TO FACTORY SET–UP INFORMATION SHEET TO DETERMINE WHICH TRANSDUCER IS UTILIZED IN YOUR DPT–PLUS.

10 – CUSTOMER SERVICE

10.1 – CUSTOMER SERVICE/TECHNICAL SUPPORT

Air Monitor Corporation provides in-house technical support for our products:

Monday through Friday
7 am to 5 pm (pst)
Phone: 707-544-2706 or 1-800-AIRFLOW
Fax: 707-526-2825

Additionally, on-site technical assistance is available. Before contacting the Customer Service Department, please ensure any applicable troubleshooting steps outlined in Section 8 have been performed.

10.2 – REPAIRS/RETURNS

If after contacting the Customer Service Department it is determined that equipment will require return to Air Monitor Corporation for further repair, a Return Authorization number will be issued by the Customer Service Department. A Confirmation of Return Authorization with shipping instructions will be sent via facsimile.

Equipment to be returned to Air Monitor should be returned in its original shipping container if possible. If this is not possible, ensure equipment is packaged sufficiently to protect it during shipment.

CAUTION
All damage occurring during transit is the Customer's responsibility.

List the Return Authorization (R/A) number on the packing list and clearly mark this number on the outside of each shipping container.

Costs associated with return of equipment to Air Monitor are the customer's responsibility regardless whether the repair/return is under warranty.

10.3 – WARRANTY REPAIRS/RETURNS

Once the Customer Service Department determines that the equipment repair is under warranty, the item will be repaired and returned to the customer at no charge.

10.4 – NON-WARRANTY REPAIRS/RETURNS

Customer will be invoiced for all parts and labor required for the repair of equipment. Return shipping charges will also be added to invoice.

10.5 – FIELD SERVICE

Requests for field service should be made to the Customer Service Department, who will coordinate sending a technician to customer's site.

Phone: 707-544-2706 or 1-800-AIRFLOW
Fax: 707-526-2825

Upon completion of work, technician completes a Field Service Report and gives a copy to the customer. Field service is charged on a daily basis and all travel expenses are also added to customer's invoice.

APPENDIX A

FACTORY SET-UP SHEETS

(provided separately with the transmitter)